4K Digital Multi Presentation Switcher

MSD-72 Series

MSD-7201UHD / MSD-7202UHD / MSD-7203UHD / MSD-7204UHD
MSD-7201UHDTB / MSD-7202UHDTB / MSD-7203UHDTB / MSD-7204UHDTB

＜User's Guide＞

Ver.1.3.0

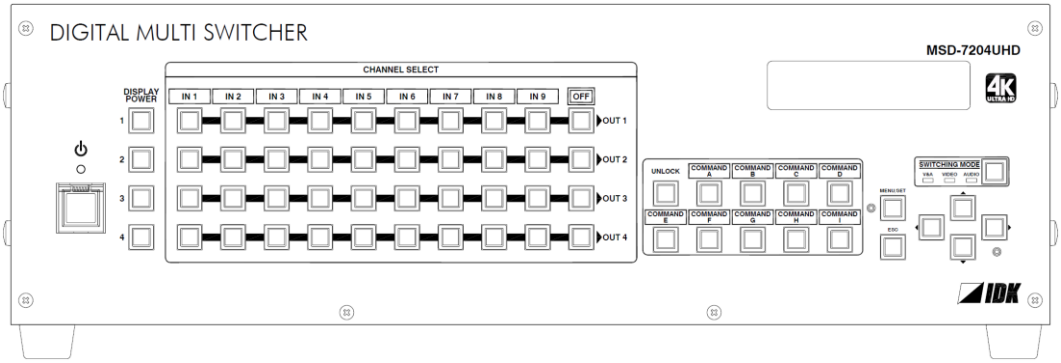

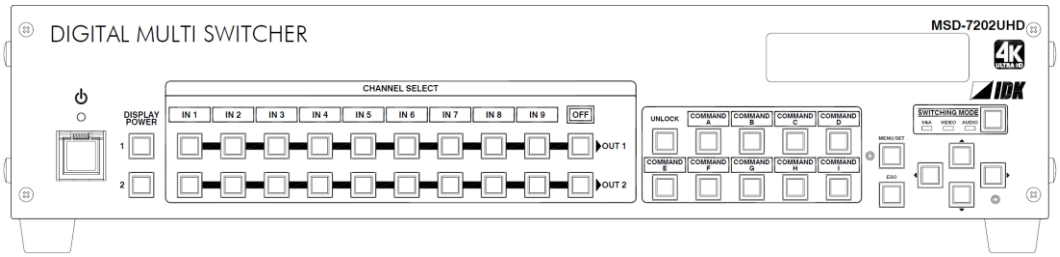

- Thank you for choosing our Digital Multi Switcher.
- To ensure the best performance of this product, please read this User's Guide fully and carefully before using it and keep this manual beside the product.

IDK Corporation

Trademarks

- The terms HDMI and HDMI High-Definition Multimedia Interface, and the HDMI Logo are trademarks or registered trademarks of HDMI Licensing Administrator, Inc. in the United States and other countries.
- PJLink is a trademark in Japan, the United States, and other countries/regions.
- Blu-ray Disc and Blu-ray are trademarks of Blu-ray Disc Association.
- Microsoft, Windows, Internet Explorer are either registered trademarks or trademarks of the Microsoft Corporation in the United States and other countries.
- The terms Mozilla and Firefox, and their logos are registered trademarks or trademarks of Mozilla Foundation in the United States and other countries.
- Google Chrome is a registered tradenark or trademark of Google Inc.
- Javascript® is a tradenark or registered trademark of Oracle Corporation, its subsidiaries, and affiliated companies in the United States and other countries.
- Oracle and Java are trademarks of Oracle Corporation its subsidiaries, and affiliated companies in the United States and other countries.
- All other company and product names mentioned in this manual are either registered trademarks or trademarks of their respective owners. In this manual, the "®" or "™" marks may not be specified.

Before reading this manual

- All rights reserved.
- Some of the contents in this user's guide such as appearance diagrams, menu operations, communication commands, and so on may differ from the MSD depending on the version.
- This Users guide is subject to change without notice. You can download the latest version from IDK's website at: http: //www.idkav.com

The reference manual for the MSD consists of the following two volumes:

- User's guide (this document):
  Provides explanations and procedures for operations, installation, connections among devices, I/O adjustment and settings.

- Command guide: Please download the command guide from the website above.
  Provides explanations and procedures for external control using RS-232C and LAN communications.

FCC STATEMENT

This equipment has been tested and found to comply with the limits for a Class A digital device, pursuant to part 15 of the FCC Rules. These limits are designed to provide reasonable protection against harmful interference when the equipment is operated in a commercial environment. This equipment generates, uses, and can radiate radio frequency energy and, if not installed and used in accordance with the instruction manual, may cause harmful interference to radio communications. Operation of this equipment in a residential area is likely to cause harmful interference, in which case the user will be required to correct the interference at their own expense.

CE MARKING

This equipment complies with the essential requirements of the relevant European health, safety and environmental protection legislation.

WEEE MARKING

Waste Electrical and Electronic Equipment (WEEE), Directive 2002/96/EC
(This directive is only valid in the EU.)
This equipment complies with the WEEE Directive (2002/96/EC) marking requirement.
The left marking indicates that you must not discard this electrical/electronic equipment in domestic household waste.

Safety instructions

Read and understand all safety and operating instructions before using this product. Follow all instructions and cautions as detailed in this document.

Enforcement Symbol	Description
Warning	Indicates the presence of a hazard that may result in death or serious personal injury if the warning is ignored or the equipment is handled incorrectly.
Caution	Indicates the presence of a hazard that may cause minor personal injury or property damage if the caution is ignored or the equipment is handled incorrectly.

Symbol	Description	Example
Caution	This symbol is indicated to alert the user. (Warning and caution)	**Electrical Hazard**
Prohibition	This symbol is intended to prohibit the user from actions.	**Do not disassemble**
Instruction	This symbol is intended to instruct the user.	**Unplug**

Warning	
Prohibition	**Do not place the product in any unstable place.** Install the product to a horizontal and stable place. Otherwise, it may fall/turn over and lead to injury.
	Do not place the product in any environment with vibration. Otherwise, it may move/fall and lead to injury.
	Keep out any foreign objects. In order to avoid fire or electric shock, do not allow foreign objects, such as metal and paper, to enter the product from the vent holes.
	For power cable/ plug: • **Do not scratch, heat, or modify, including extending them.** • **Do not pull, put heavy stuff on them, or pinch them.** • **Do not bend, twist, or tie them together forcefully.** If they are used in those states continuously, it may cause fire or electric shock. If power cables/plugs become damaged, contact IDK.
Do not disassemble	**Do not repair, modify or disassemble.** Since the product includes high-voltage part, those actions may cause fire or electric shock. For internal inspections or repairs, contact IDK.
Do not touch	**In the event of lighting or thunder, do not touch the main unit and cables such as power cable and LAN cable.** Contact may cause electric shock
Instruction	**For installation:** The product is intended to be installed by skilled technicians. For installation, please contact a system integrator or IDK. Otherwise, it may cause fire, electric shock, injury, or property damage.
	Set the power plug in a convenient place to unplug easily. You can easily unplug in case of any extraordinary failure or abnormal situation, and it also helps for unplugging when you do not use it for a long period.
	Plug the power plug into appropriate outlet completely. If the plug is plugged incompletely, it may overheat which causes electrical shock or fire. Do not use damaged plug or loosened outlet.
	Clean the power plug regularly. If the plug is covered in dust, it may cause fire due to reduced insulating power.
Unplug	**Unplug immediately if the product smokes, makes unusual noise, or smells.** If you continue to use the product under those situations, it may cause electric shock or fire. After confirming that the product stops smoking, contact IDK.
	Unplug immediately if you drop the product or if the cabinet is damaged. If you continue to use the product under those situations, it may cause electrical shock or fire. For maintenance and repair, contact IDK.
	Unplug immediately if water or other objects are directed inside. If you continue to use it under those situations, it may cause electrical shock or fire. For maintenance and repair, contact IDK.
For connection	
Instruction	Differences in ground potential among the product and peripheral devices may cause electric shock or damage of the devices. When using cables to connect devices, including connection of long-distance transmission, unplug the power cables of all related devices. After connecting signal/control cables of each device, plug in the power cables of each device.

Caution	
Prohibition	**Do not place the product in any place where it will be subjected to high temperatures.** If the product is subjected to direct sunlight or high temperatures, it may cause fire.
	Do not place the product in humid, oil smoke, or dusty place. If the product is placed near humidifiers or dusty area, it may cause fire or electric shock.
	Do not block the vent holes. If ventilation slots are blocked, it may cause fire or failure due to internal heat.
	Do not put heavy items on the product. It may fall/turn over and lead to injury.
	Do not exceed ratings of outlet and wiring devices. If several plugs are put in an outlet, it may cause fire and electric shock.
	Use only the provided AC adapter and power cable. **Do not use the provided AC adapter and power cable with other products.** If non-compliant adapter or power cables is used, it may cause fire or electrical shock. Use the provided AC power connection cable. If you want to use your product in other countries that use different AC power cables, contact IDK.
No wet hands	**Do not plug or unplug with wet hands.** It may cause electrical shock.
Instruction	**Use and store the product within the specified temperature/humidity range.** If the product is used outside the range continuously, it may cause fire or electric shock.
	Turn off devices when they are connected to another device. It may cause fire or electric shock.
Unplug	**Unplug the power plug if you do not use the product for a long period.** In case of defect, it may cause fire.
	Unplug the power plug before cleaning. It may cause electric shock.

For installation	

For rack mount devices:

Instruction	Mount the product to the rack meeting EIA standards, and maintain spaces above and below for air cooling. For your safety, attach an L-shape bracket in addition to the mount bracket kit for the front panel to balance the weight.

For devices with rubber feet:

Instruction	Never insert only the screws into the holes after removing the rubber feet. It may lead to damage when the screws contact electrical circuit or parts inside of the product. To put the rubber feet back on, use only provided rubber feet and screws.

Altitude:

Instruction	Do not place the product at elevations of 2,000 meters (6562 feet) or higher above sea level. Failure to do so may shorten the life of the internal parts and result in malfunctions.

Table of Contents

1 About this Guide

This user's guide explains how to use the MSD-72 series switchers (hereafter referred to as "MSD"), which have a scan converter. The MSD series is devided into two models based on the type of audio connectors and RS-232C port. Since descriptions in this document are for MSD-7204UHD and MSD-7204UHDTB having four outputs, there may be slight differences between these models and other models having one to three outputs.

[Table 1.1] Connector shape

Model			Connector type	
	Input	Output	Audio connector	RS-232C port
MSD-7201UHD	9 inputs	1 output	RCA pin jack	D-sub9 pin (Male)
MSD-7202UHD		2 outputs		
MSD-7203UHD		3 outputs		
MSD-7204UHD		4 outputs		
MSD-7201UHDTB	9 inputs	1 output	5-pin terminal block	3-pin terminal block
MSD-7202UHDTB		2 outputs		
MSD-7203UHDTB		3 outputs		
MSD-7204UHDTB		4 outputs		

【See: 5.2 Rear panel】

2 Included items

Make sure all items below are included in the package.
If any items are missing or damaged, please contact IDK.

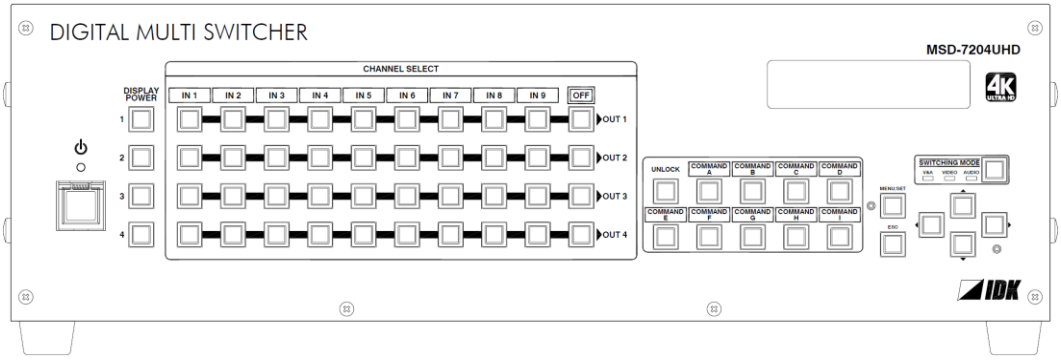

One (1) main unit (Figure: MSD-7204UHD/UHDTB)

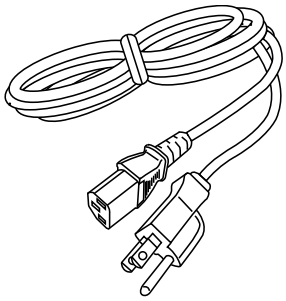

One (1) power cord
(1.8 meters; approximately 5.91 feet)

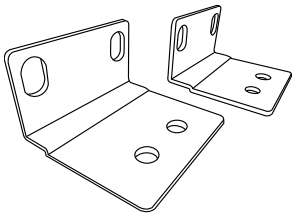

Two (2) rack mounting brackets

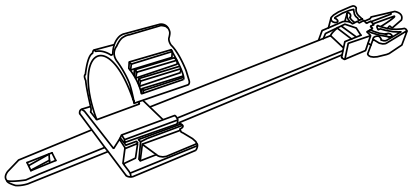

Cable clamps
Eight (8) for MSD-7201UHD / MSD-7201UHDTB
Nine (9) for MSD-7202UHD / MSD-7202UHDTB
Ten (10) for MSD-7203UHD / MSD-7203UHDTB
Eleven (11) for MSD-7204UHD / MSD-7204UHDTB

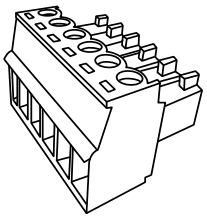

Three (3) 6-pin terminal blocks

[Figure 2.1] Included items list (1/2)

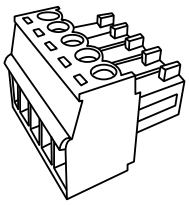

5-pin terminal Block

Ten (10) for MSD-7201UHDTB
Eleven (11) for MSD-7202UHDTB
Twelve (12) for MSD-7203UHDTB
Thirteen (13) for MSD-7204UHDTB

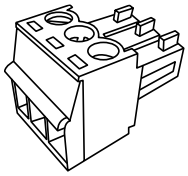

3-pin terminal Block

Two (2) for MSD-7201UHDTB
Two (2) for MSD-7202UHDTB
Two (2) for MSD-7203UHDTB
Two (2) for MSD-7204UHDTB

[Figure 2.2] Included items list (2/2)

3 Product outline

MSD-7200 series is a digital presentation switcher having a built-in scan converter.

For video input, the following signal formats are supported: HDMI, DVI, composite video, S video, analog RGB, and analog YPbPr signal. Input video signal is converted to HDMI signal and output at a resolution up to 4K@60.

For audio input and output, digital audio and analog audio are supported, and they are compatible. Audio level of each input and output can be set individually. The lip sync function corrects the gap between the video and audio.

Since the MSD also has RS-232C (2 ports) and LAN, settings can be controlled remotely. Additionally, external devices that are connected to the MSD can be controlled through RS-232C, LAN, CEC, or contact closure by registering external control commands. The waiting function helps you to send external commands after cooling time passes as power supply control of projectors or the like.

External control commands can be executed from front keys, RS-232C, or LAN. They can be executed when input channel selection key is operated or the MSD is turned ON.

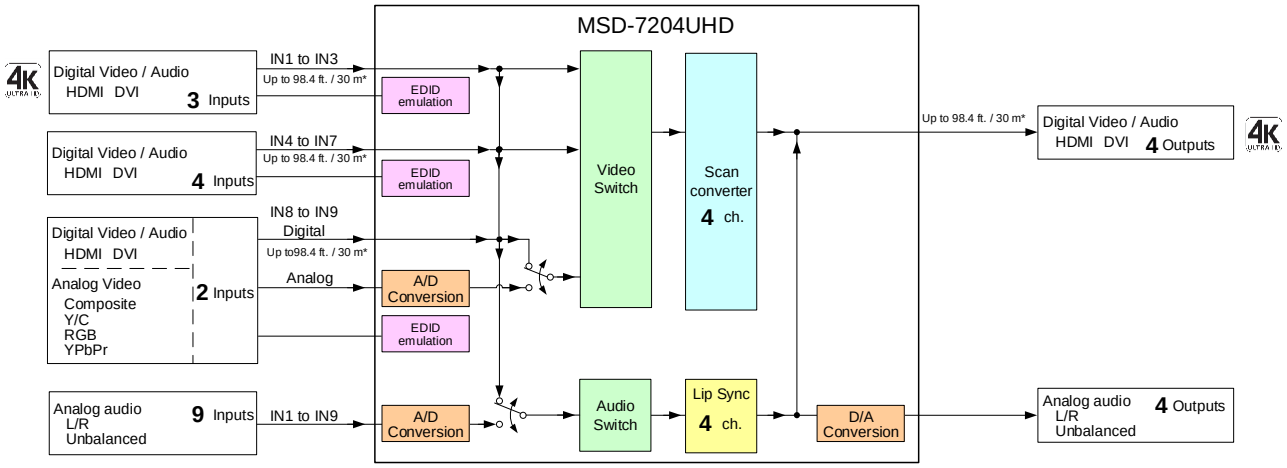

*Maximum extension distance
1080p@60: up to 98.4 ft. / 30 m, 4K@60: up to 39.4 ft. / 12 m : Only when IDK's 18 Gbps supported cable is used. IN1 to IN3 only.

[Fig. 3.1] MSD-7204UHD diagram

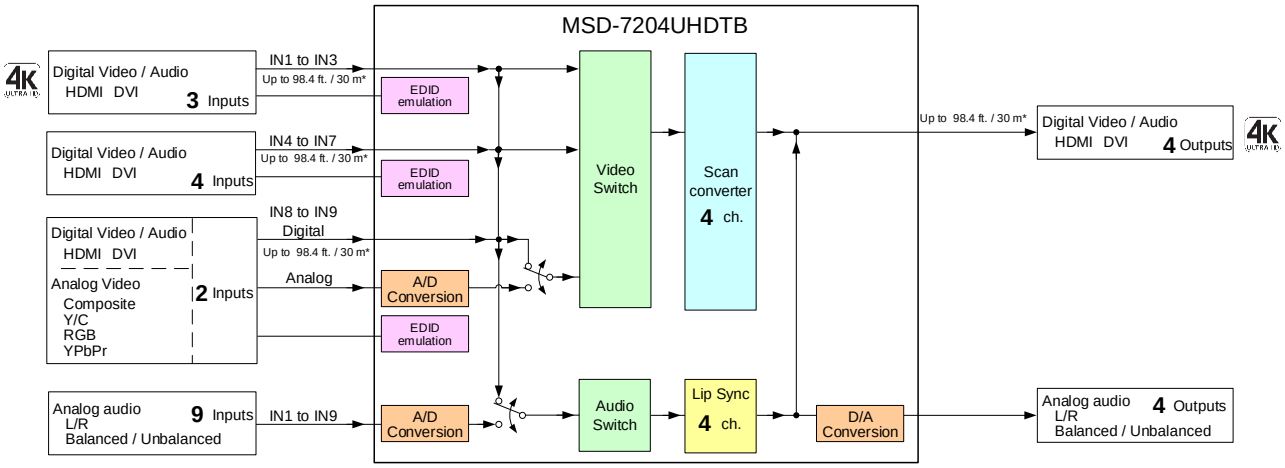

*Maximum extension distance
1080p@60: up to 98.4 ft. / 30 m, 4K@60: up to 39.4 ft. / 12 m : Only when IDK's 18 Gbps supported cable is used. IN1 to IN3 only.

[Fig.3.2] MSD-7204UHDTB diagram

4 Features

■ **Video**

- Maximum resolution: 4K@60(4:4:4)
- Supports HDCP 1.4/2.2
- Scan conversion
- Aspect ratio control
- Seamless switching*
- A/D conversion output
- Anti-snow

■ **Audio**

- A/D, D/A conversion
- Volume adjustment
- Lip sync

■ **Control**

- Input: RS-232C, LAN
- Output: RS-232C, LAN, contact closure, CEC, PJLink

■ **Others**

- EDID emulation
- All functions setting through browser
- Auto input detection and switching
- Audio breakaway enables independent audio and video switching
- Cross point memory
- Preset memory
- Last memory
- Connection reset
- Operation lock

* Seamless switching with a black frame

5 Panels

5.1 Front panel

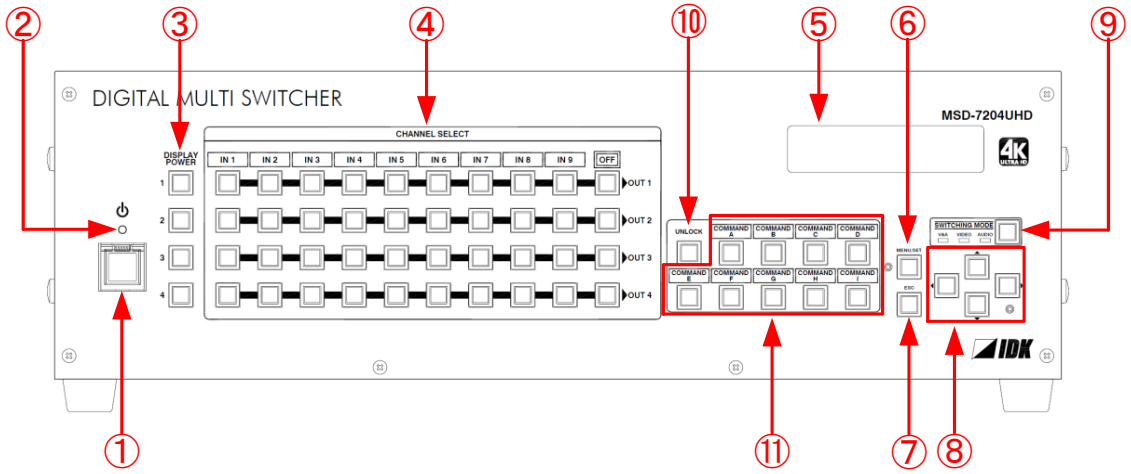

[Figure 5.1] Front panel drawing (MSD-7204UHD)

[Table 5.1] Front panel's part name and description

#	Part name	Description
①	Standby switch (power)	Turns on/off the MSD 【See: 8.1 Power】
②	Power LED	Shows power status of the MSD 【See: 8.1 Power】
③	DISPLAY POWER key (DISPLAY POWER)	Turns on/off connected sink devices 【See: 8.4 Menu operation】
④	Input channel selection key	Selects input channels 【See: 8.2 Selecting input channels】
⑤	VFD screen	Displays menus and settings
⑥	MENU/SET key	Displays menus and edits/controls settings 【See: 8.3 Menu operation】
⑦	ESC key	Ends the current menu setting
⑧	Arrow keys (▲, ▼, ◄, ►)	Switches menu, moves cursor, and changes set values
⑨	SWITCHING MODE key	Selects a switching mode (V&A, VIDEO, AUDIO) if an input is selected. 【See: 8.2 Selecting input channels】
⑩	UNLOCK key	Selects a lock/unlock of control command execution keys ON: Unlocks/enables control command execution Blinks: Unlocks/enables preset command execution OFF: Locks control command execusion
⑪	Control command execution key	Executes registered commands or registered preset commands 【See: 9.12 Setting control command】 【See: 9.13 Preset memory】

5.2 Rear panel

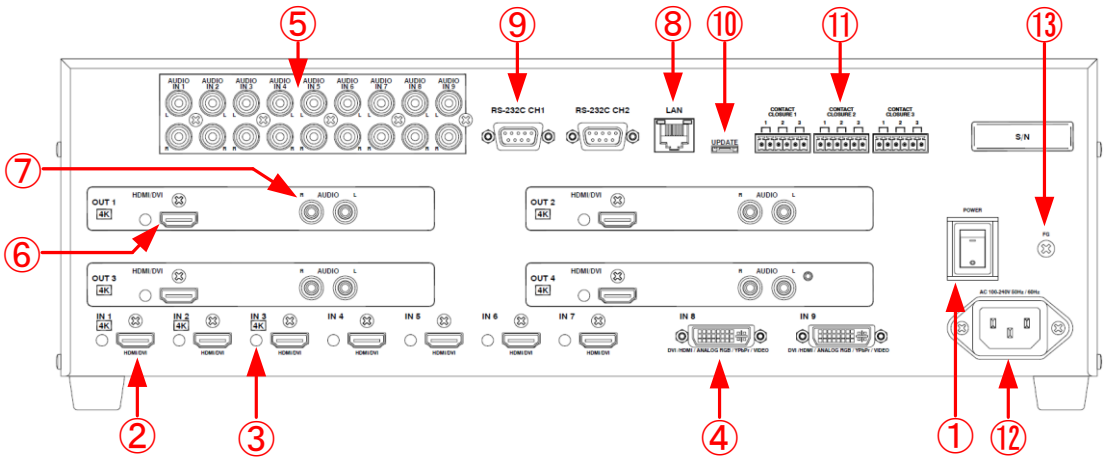

[Figure 5.2] Rear panel drawing (MSD-7204UHD)

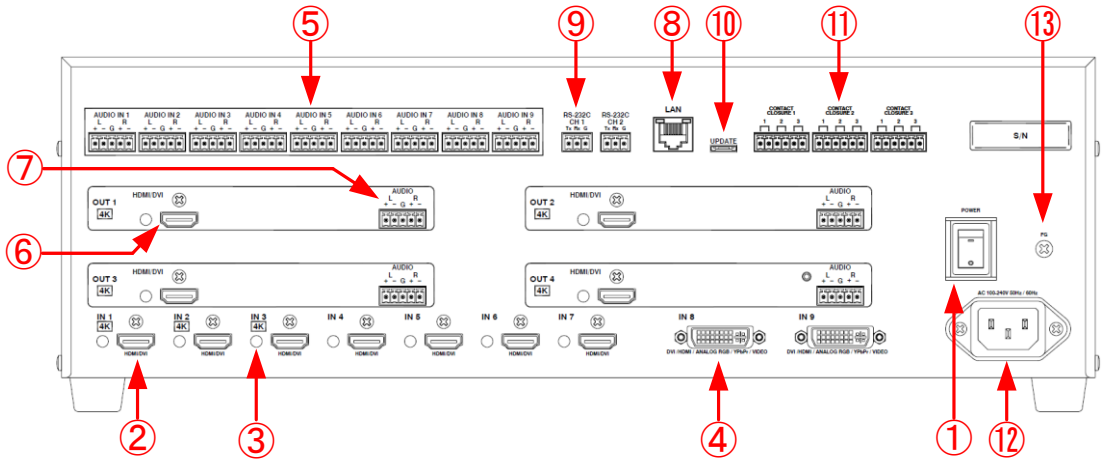

[Figure 5.3] Rear panel drawing (MSD-7204UHDTB)

[Table 5.2] Rear panel's part name and description

#	Part name	Description
①	Main power switch	Turns on/off main power of the MSD 【See: 8.1 Power】
②	HDMI input connector	Input connectors for HDMI and DVI signal to connect to a source devices, such as Blu-ray players.
③	HDMI cable fixing hole	Fixes HDMI cables by inserting cable clamps. 【See: [Figure 7.1] 】
④	DVI input connector	Connects a DVI-I cable or DVI-D cable. HDMI signal can be input using an HDMI-DVI conversion cable. Analog video also can be input using a DVI-analog conversion cable. ・HDMI ・Analog RGB (such as PC) ・Analog YPbPr (SDTV / HDTV) ・Cpmposite video (NTSC / PAL) ・S video (NTSC / PAL) 【See: 7.2.2 DVI-I input connector】
⑤	Audio input connector	Input connector for analog audio signal Connector type is able to select between RCA and terminal block (5-pin) 【See: 7.2.3 Connecting audio cables】
⑥	HDMI output connector	Output connector for HDMI and DVI signal to connect to sink devices such as LC monitors and projectors
⑦	Audio output connector	Analog output connectors of audio to connect to amplifier, speakers, and mixers. Connector type is able to select between RCA and terminal block (5-pin) 【See: 7.2.3 Connecting audio cables】
⑧	LAN port	For external control by communication commands or web browsers
⑨	RS-232C ports	For external control by communication commands Connector type is able to select between D sub (9-pin) and terminal block (3-pin) 【See: 7.2.4 Connecting RS-232C cable】
⑩	Maintenance port	Not used. Keep this connector free.
⑪	Contact closure	For external control by contact Connctor type is terminal block (6-pin). 【See: 7.2.5 Contact closure】
⑫	AC power connector	For the provided power cable
⑬	Frame ground	For indoor ground terminal. M3 screws are used.

6 System Configuration Example

Configuration example: source and sink devices are connected to the MSD

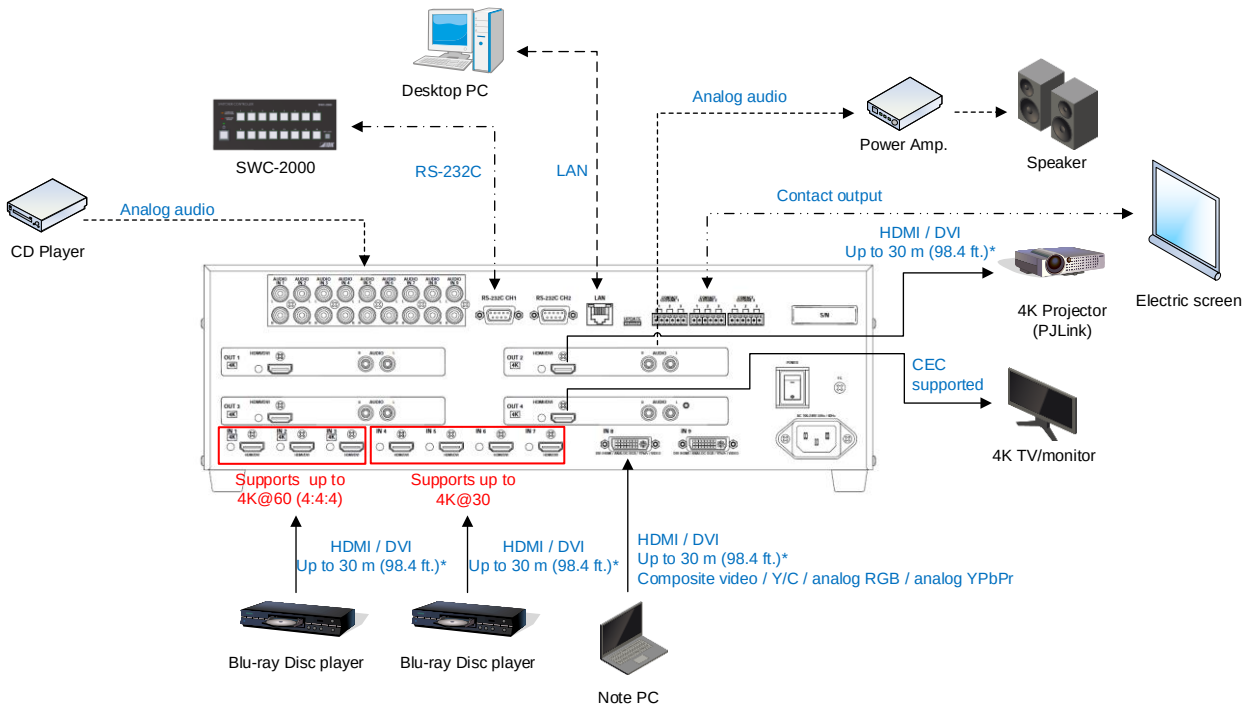

*Maximum extension distance
1080p@60: up to 98.4 ft. / 30 m, 4K@60: up to 39.4 ft. / 12 m : Only when IDK's 18 Gbps supported cable is used. IN1 to IN3 only.

[Figure 6.1] Configuraiton example MSD-7200 series (MSD-7204UHDTB)

7 Precautions

Before connecting to external devices, follow the precautions below.

7.1 Installation

When installing the MSD, please observe the following precautions.

- Do not place the MSD on top of another MSD.
- Do not block vent holes. Please secure the space above ambient 30 mm/1.18 inches.
- Do not install the MSD to an enclosed space. When the MSD needs to be installed to EIA rack mount or an enclosed space, please prepare ventilating equipment to keep the ambient temperature at 40 degrees C/104 degrees F or less. If inadequately vented, the life of parts may be shortened and operations may be affected.

■ Attaching rack mounting brackets

1. Remove four M5 screws from one side of the unit. Retain these screws for step 2.
2. Attach one bracket to the side of the unit using the screws removed in step 1.
3. Repeat steps 1 and 2 on the other side of the unit.

[Table 7.1] Attaching rack mounting brackets

Rack size	EIA rack 2U	EIA rack 3U
Installation	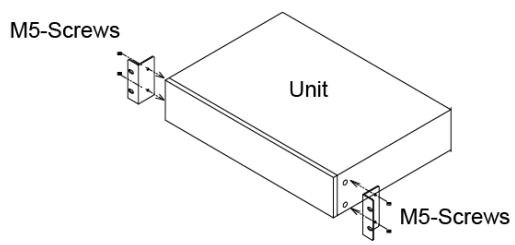	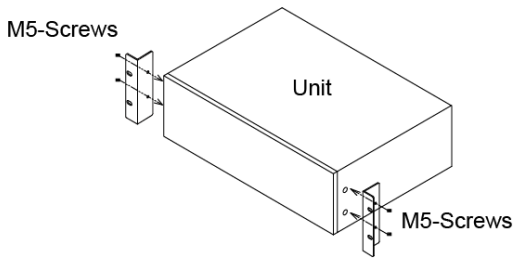
Model number	MSD-7201UHD, MSD-7201UHDTB MSD-7202UHD, MSD-7202UHDTB	MSD-7203UHD, MSD-7203UHDTB MSD-7204UHD, MSD-7204UHDTB

Note:
The standard screw tightening torque is 2.94 N·m (about 30 kgf·cm).

7.2 Cabling

When connecting the MSD to the external devices, please observe the following precautions.

- Read manuals of the external devices.
- Before you connect the cable to the MSD or an external device, please remove electrification of the body by touching the metal around that is grounded.
- Turn off all units power before connecting the cable.
- Be sure to plug cables completely and install them without any stress on connectors.
- Fix HDMI cables using cable clamps to prevent those cables from falling off.

Fixing HDMI cable using cable clamp

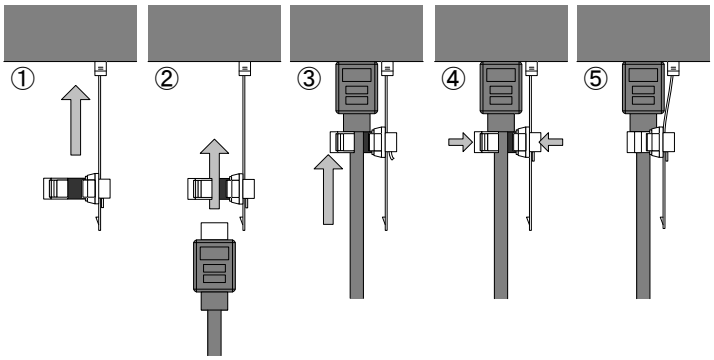

Removing HDMI cable and cable clamp

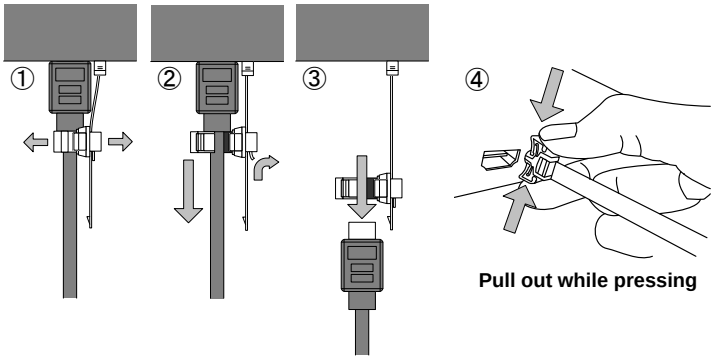

[Figure 7.1] Attaching a cable clamp

7.2.1 Cables

Use the right cable depending on the system configuration.
For analog audio and RS-232C, process cables to match the connectors as needed.

【See: 7.2.3 Connecting audio cables】
【See: 7.2.4 Connecting RS-232C cable】

7.2.2 DVI-I input connector

29-pin DVI-I female connectors are used for DVI input connerctors.

The DVI-I input connectors can be used for HDMI/DVI digital signal and other analog signal.

■ **DVI signal input**

Use DVI-I or DVI-D cable.
Signal only supports single-link.

■ **HDMI signal input**

Use HDMI-DVI conversion cable.

■ **Analog RBG signal input**

Use conversion cable which has DVI-I (male) and high-densed D-sub 15 (female)

■ **Other analog signal input**

Analog YPbPr / composite video / Y/C signal can be input.
Use conversion cable for each signal.
Pin assignments for each signal are shown below.

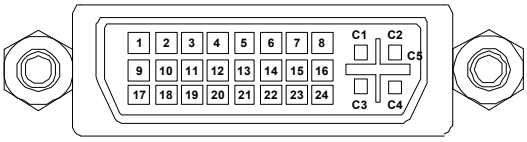

[Figure 7.2] 29-pin DVI-I female connector

[Table 7.2] Pin assignments

Pin #	Input signal name				
	HDMI / DVI	Analog RGB	Analog YPbPr	Composite video	Y/C
1	TMDS Data2-	N.C.	N.C.	N.C.	N.C.
2	TMDS Data2+	N.C.	N.C.	N.C.	N.C.
3	GND	N.C.	N.C.	N.C.	N.C.
4	N.C.	N.C.	N.C.	N.C.	N.C.
5	N.C.	N.C.	N.C.	N.C.	N.C.
6	DDC Clock	DDC Clock	N.C.	N.C.	N.C.
7	DDC Data	DDC Data	N.C.	N.C.	N.C.
8	N.C.	V-Sync	N.C.	N.C.	N.C.
9	TMDS Data1-	N.C.	N.C.	N.C.	N.C.
10	TMDS Data1+	N.C.	N.C.	N.C.	N.C.
11	GND	N.C.	N.C.	N.C.	N.C.
12	N.C.	N.C.	N.C.	N.C.	N.C.
13	N.C.	N.C.	N.C.	N.C.	N.C.
14	+5V Power	N.C.	N.C.	N.C.	N.C.
15	GND	N.C.	N.C.	N.C.	N.C.
16	Hot Plug Detect	N.C.	N.C.	N.C.	N.C.
17	TMDS Data0-	N.C.	N.C.	N.C.	N.C.
18	TMDS Data0+	N.C.	N.C.	N.C.	N.C.
19	GND	N.C.	N.C.	N.C.	N.C.
20	N.C.	N.C.	N.C.	N.C.	N.C.
21	N.C.	N.C.	N.C.	N.C.	N.C.
22	GND	N.C.	N.C.	N.C.	N.C.

23	TMDS Clock+	N.C.	N.C.	N.C.	N.C.
24	TMDS Clock-	N.C.	N.C.	N.C.	N.C.
C1	N.C.	Red	Pr / Cr	N.C.	N.C.
C2	N.C.	Green / SOG	Y	VIDEO	Y
C3	N.C.	Blue	Pb / Cb	N.C.	C
C4	N.C.	H-Sync / CS	N.C.	N.C.	N.C.
C5	N.C.	GND	GND	GND	GND

N.C. : No Connection
SOG : Sync On Green
CS : Composite Sync

7.2.3 Connecting audio cables

For audio input connector and audio output connectors, RCA pin jack or 5-pin terminal block can be used depending on the model you use. Use the appropriate cables for the type of audio input connector and audio output connectors.

[Table 7.3] Connetor types for analog audio input/output

Part number	Audio signal		Connector type for analog audio input/output connector
	Input channels	Output channels	
MSD-7201UHD	9 inputs	1 output	RCA pin jack
MSD-7202UHD		2 outputs	
MSD-7203UHD		3 outputs	
MSD-7204UHD		4 outputs	
MSD-7201UHDTB	9 inputs	1 output	5-pin terminal block
MSD-7202UHDTB		2 outputs	
MSD-7203UHDTB		3 outputs	
MSD-7204UHDTB		4 outputs	

■ RCA pin jack for audio input/output connectors

Use commercially available audio cables (RCA pin) if the MSD has RCA pin jack for audio input and output connectors.

■ 5-pin Terminal block analog audio input/output connectors

Fix audio cable to the attached 5-pin terminal block, and then connecting to the MSD.
The MSD supports both balanced and unbalanced signal
IDK recommends using AWG 28 to AWG16 cable. The maximum peeling length is 7 mm (0.28 inch approx.)

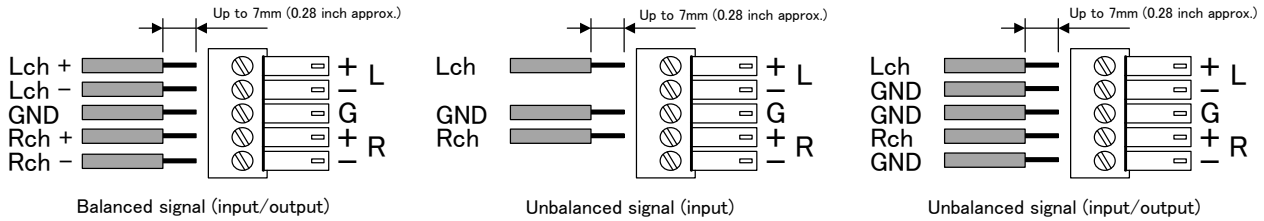

[Figure 7.3] Connecting audio cable to 5-pin terminal block connector

7.2.4 Connecting RS-232C cable

For RS-232C ports, 9-pin D-sub male pin or 3-pin terminal block can be used depending on the model you use. Use the appropriate cables for the type of RS-232C port.

[Table 7.4] Connector types for RS-232C port

Part number	Number of RS-232C port	Connector types for RS-232C
MSD-7201UHD	2 ports	9-pin D-sub (male)
MSD-7202UHD		
MSD-7203UHD		
MSD-7204UHD		
MSD-7201UHDTB	2 ports	3-pin terminal block
MSD-7202UHDTB		
MSD-7203UHDTB		
MSD-7204UHDTB		

■ 9-pin D-sub RS-232C ports

Use cross cable when you connect the MSD to PC.
The pin assignments of RS-232C port D-sub (9-pin) are following:

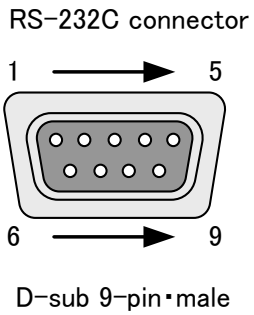

Pin #	Signal
1	N.C. (Not used)
2	RxD (Receiving data)
3	TxD (Sending data)
4	DTR (Not used)
5	GND (Ground)
6	DSR (Not used)
7	RTS (Sending request)
8	CTS (Receiving request)
9	N.C. (Not used)

[Figure 7.4] 9-pin D-sub connector pin assignments

■ 3-pin Terminal block RS-232C ports

Fix RS-232C cable to the attached3-pin terminal block, and then connect it to the MSD.
IDK recommends using AWG 28 to AWG16 cable. The maximum peeling length is 7 mm (0.28 inch approx.)

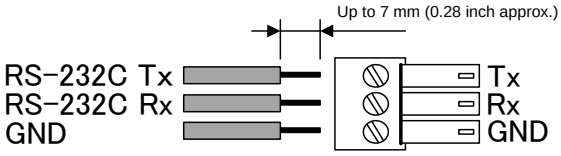

[Figure 7.5] Connecting RS-232C cable to 3-pin terminal block connector

7.2.5 Contact closure

The MSD has 9 channels contact closure for external control.
One (1) connector has three (3) channels, and it can do the opening and closing operation of the relay individually. The maximum peak load for each contact is 24 VDC 500 mA.

Fix a cable to the attached 6-pin terminal block, and then connecting to the MSD.
IDK recommends using AWG 28 to AWG16 cable. The maximum peeling length is 7 mm (0.28 inch approx.)

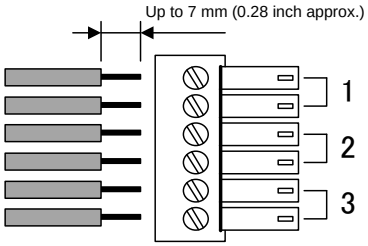

[Figure 7.6] Connecting cable to 6-pin terminal block connector

8 Basic operation

8.1 Power

The MSD has the main power switch on the rear panel and the stanby switch on the front panel.
The power status of the MSD can confirm at power LED on front panel.

[Table 8.1] Power status

Power status	Power LED	Main switch	Stanby switch
Power OFF	OFF	OFF	---
Standby	ON (Orange)	ON	OFF
Power ON	ON (Green)	ON	ON (Green)

When the power status is standby, the MSD power can be controlled by the standby switch, RS-232C, and LAN.
The status for when the main switch is turned on can be set from "**9.15.1 Power switch**".

【See: 9.15.1 Power switch】

8.1.1 Required time

After the MSD is turned on, it takes 7 seconds to receive communication command and WEB browser operation and takes 12 seconds or longer to receive front panel operation.

[Table 8.2] Required time

Operation	Required time
Receiving communication command	7 seconds
Receiving WEB browser operation	7 seconds
Receiving operation of front panel	12 or longer seconds

Note:
If "**9.14.7 Bitmap output at startup**" is set to "ON", the required time for the front panel operation may be longer.

【See: 9.14.7 Bitmap output at startup】

8.2 Selecting input channels

Video and audio signal can be switched simaltanuously or independently.
Press the SWITCHING MODE key to switch video and audio signal, and then use the input channel selection keys to select input channels of video and audio signal for each output channel.

SWITCHING MODE
When the "V&A" or "VIDEO" LED lights, input and output settings of video signal are shown by the CHANNEL SELECT keys.
When the "AUDIO" LED lights, input and output settings of audio signal are shown by the CHANNEL SELECT keys

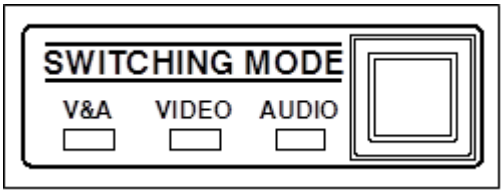

[Figure 8.1] Selects switching mode

[Table 8.3] Switching mode

Switching mode	Discription
V&A	Video and audio simultaneously
VIDEO	Video
AUDIO	Audio

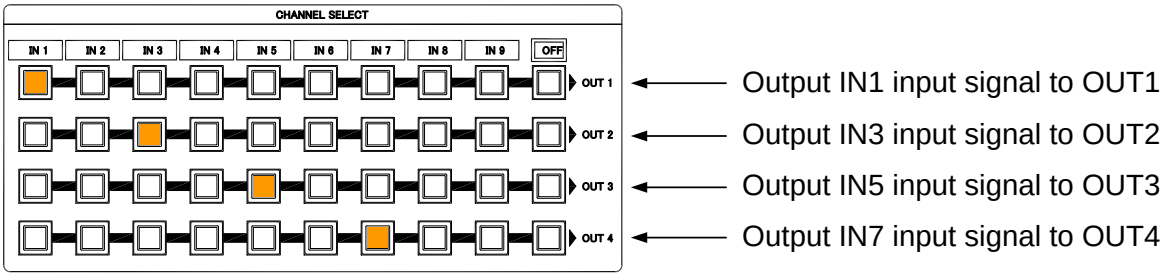

[Figure 8.2] Input/output signalelection

8.3 Menu operation

You can use the VFD screen and front panel keys to set settings.

Press the "MENU/SET" key to apply the setting and to go to the next hierarchy.
Press the "ESC" key to go back to the previous screen.
Use the "▲" and "▼" keys to select channels and use the "▲" and "▼" keys to select the menu item.

In the setting screen, use "▲", "▼", "▲" and "▼" keys to move the cursor and set the setting, and the set values are saved automatically after the operation.

【See: 9.1 Menu list】

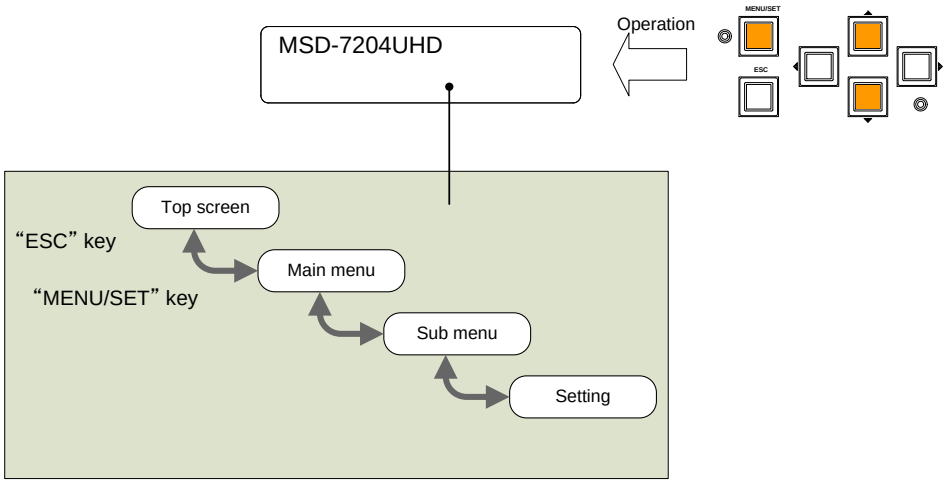

[Figure 8.3] Menu hierarchy

Tip:
"MENU/SET" key LED in ON only for settable menu.
Some setting screens, the set value is applied from the "MENU/SET" key. When the "MENU/SET" key blinks, press the key to apply the set value, and then the key will turn on (not blinking any more).
We have the cover for menu operation keys to prevent accidental operations. Please contact us as needed.

Note:
Do not turn off the MSD while "NOW SAVING" is displayed, otherwise, the setting information may be lost.

8.4 Menu operation

You can register the control command to turn on/off the sink device. Press the key to send the control command to the sink device.

【See: 9.12.3 Command link】

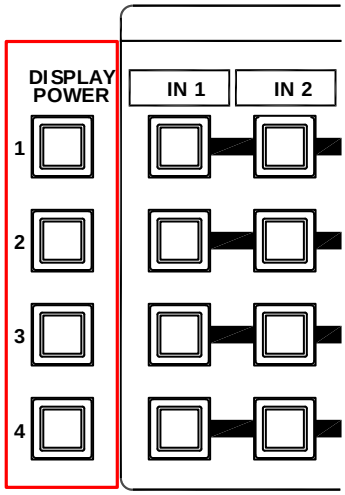

[Figure 8.4] Sink device power supply key

[Table 8.4] Sink device power supply key

Sink device power status	LED
Power ON	Lights (orange)
Power OFF	Turned off

Note:

If power a ON/OFF control command is sent to a sink device and reply command of normal termination is sent from the sink device, the "DISPLAY POWER" key turns orange (when powered ON) or the key light turns off (when powered OFF)

If the reply command from the sink device is not checked, the actual power status of the sink device and the LED may not match.

8.5 Command control

Executing control commands which are registered and linked to external command keys (COMMAND A to COMMAND I). No commands are registered as Factory default setting. Register and link commands to external command keys.

【See: 9.12.3 Command link】

8.6 Locking and Unlocking key lock

Press and hold the "UNLOCK" key for 2 seconds or longer to set/cancel keylock for keys below. You will hear a long beep sound and then the following message is displayed for 1 second. Operation Lock can be set and done by group.

- OPERATION LOCK ! (Locked)
- OP LOCK RELEASE ! (Unlocked)

【See: 9.16.1 Operation lock mode】

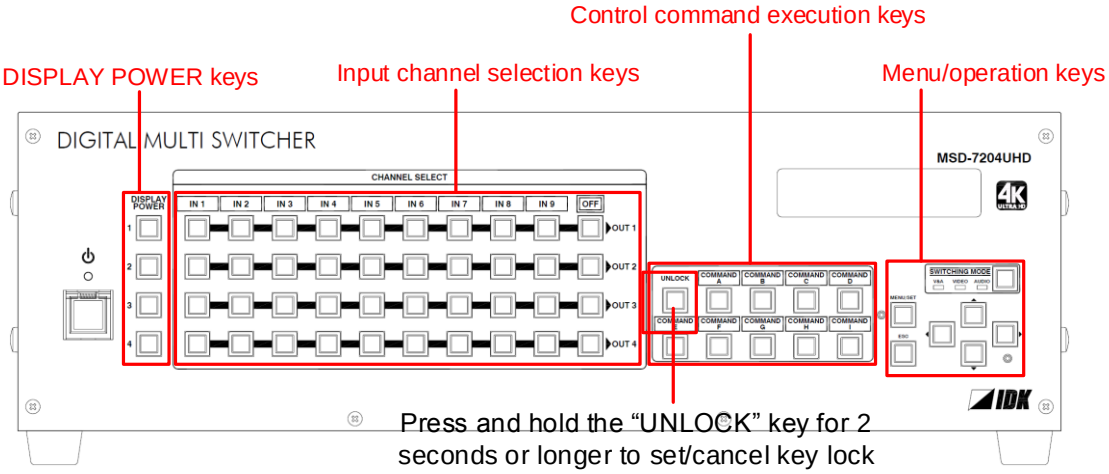

[Figure 8.5] Keys to be set/cancel operation lock (MSD-7204UHD)

8.7 Initialization

All settings will be reset to Factory default values by turning on the MSD while pressing the "ESC" key.
Press and hold the "ESC" key until you hear a long beep sound.
The following list shows the Factory default values.
When settings are initialized from the WEB browser, they can be initialized without changing LAN settings.
Note that once initializing settings, these previous setting values cannot be restored. Some menus can be set for each input channel and output channel individually; see **[Table 8.15]** for details.

[Table 8.5] Factory default

Menu	Factory default		See:
OUTPUT TIMING			
RESOLUTION	For	Each output channels	P.52
	Default	AUTO	
MONITOR ASPECT	For	Each output channels	P.53
	Default	RESOLUTION	
INPUT ASPECT	For	Each input channel, each input signal	P,53
	Default	AUTO-1	
ASPECT PROCESS	For	Each input channel, each input signal	P.54
	Default	L-BOX / S-PANEL	
INPUT OVER SCAN	For	Each input channel, each input signal	P.54
	Default	105% [NTSC / PAL / SDTV input] 100% [HDTV / PC input]	
INPUT POSITION	For	Each input channel, each input signal	P.54
	Default	H : 0 V : 0	
INPUT SIZE	For	Each input channel, each input signal	P.55
	Default	H : Horizontal output resolution V : Vertical output resolution	
INPUT MASKING	For	Each input channel, each input signal	P.56
	Default	L : 0 R : Horizontal input size T : 0 B : Vertical input size	
INPUT AUTO SIZING	For	Each input channel, each input signal	P.56
	Default	---	
OUTPUT POSITION	For	Each output channels	P.54
	Default	H : 0 V : 0	
OUTPUT SIZE	For	Each output channels	P.55
	Default	H : Horizontal output resolution V : Vertical output resolution	
OUTPUT MASKING	For	Each output channels	P.56
	Default	L : 0 R : Horizontal output resolution T : 0 B : Vertical output resolution	
OUTPUT AUTO SIZING	For	Each output channels	P.56
	Default	---	
BACKGROUND COLOR	For	Each output channels	P.57
	Default	R : 0 G : 0 B : 0	
TEST PATTERN	For	Each output channels	P.57
	Default	OFF	

[Table 8.6] Factory default

Menu	Factory default		See:
IMAGE EFFECT			
INPUT SHARPNESS	For	Each input channel, each input signal	P.58
	Default	0	
INPUT BRIGHTNESS	For	Each input channel, each input signal	P.58
	Default	100%	
INPUT CONTRAST	For	Each input channel, each input signal	P.58
	Default	R : 100% G : 100% B : 100%	
INPUT HUE	For	Each input channel, each input signal	P.59
	Default	0 °	
INPUT SATURATION	For	Each input channel, each input signal	P.59
	Default	100%	
INPUT SETUP LEVEL	For	Each input channel, each input signal	P.59
	Default	0.0%	
IN DEFAULT COLOR	For	Each input channel, each input signal	P.60
	Default	---	
OUTPUT BRIGHTNESS	For	Each output channels	P.58
	Default	100%	
OUTPUT CONTRAST	For	Each output channels	P.58
	Default	R : 100% G : 100% B : 100%	
OUTPUT GAMMA	For	Each output channels	P.
	Default	1.0	
OUT DEFAULT COLOR	For	Each output channels	P.60
	Default	---	

[Table 8.7] Factory default

Menu	Factory default		See:
INPUT SETTING			
INPUT VIDEO DETECT	For	Each input channel, digital input only	P.61
	Default	10000 ms	
HDCP INPUT ENABLE	For	Each input channel, digital input only	P.62
	Default	HDCP 2.2 [IN1 to IN3] HDCP 1.4 [IN4 to IN9]	
ANALOG INPUT TYPE	For	Each input channel, each input signal, analog input only	P.63
	Default	AUTO	
INPUT OFF CHECK	For	Each input channel	P.64
	Default	ON	
INPUT AD TYPE	For	Each input channel, DVI connector only	P.64
	Default	DIGITAL	
INPUT TABLE FIXED	For	Each input channel	P.
	Default	[Setting mode] SELECTED [Individual setting ("SELECTED" is selected for setting mode)] ASPECT : OFF, ANALOG TYPE : ON(FIXED), AUDIO LEVEL : ON(FIXED)	
INPUT TIMING			
AUTO SETUP	For	Each input channel, each input signal, analog input only*1	P.67
	Default	NORMAL MODE	
H TOTAL DOTS	For	Each input channel, each input signal, analog input only*1	P.69
	Default	Depends on input signal	
H START	For	Each input channel, each input signal	P.69
	Default	Depends on input signal	
H DISPLAY	For	Each input channel, each input signal	P.70
	Default	Depends on input signal	
V START	For	Each input channel, each input signal	P.69
	Default	Depends on input signal	
V DISPLAY	For	Each input channel, each input signal	P.70
	Default	Depends on input signal	
AUTO START POS	For	Each input channel, each input signal, analog input only*1	P.71
	Default	ON	
INKNOWN TIMING	For	---	P.71
	Default	AUTO SETUP ON	
LOAD	For	Each input channel, each input signal	P.72
	Default	---	
SAVE	For	each input signal, each input signal*1	P.72
	Default	---	
TRACKING	For	Each input channel, each input signal*1	P.72
	Default	0	

*[1] Can be set and executed only if analog RGB / analog YPbPr signal is input.

[Table 8.8] Factory default

Menu	Factory default		See:
OUTPUT SETTING			
OUTPUT MODE	For	Each output channels	P.73
	Default	HDMI YCbCr 4:4:4 MODE	
SYNC OUTPUT	For	Each output channels	P.73
	Default	ON	
VIDEO OUTPUT	For	Each output channels	P.73
	Default	BLUE	
VIDEO SWITCHING	For	Each output channels	P.74
	Default	FREEZE→FADE OUT-IN	
SWITCHING SPEED	For	Each output channels	P.74
	Default	350 ms	
WIPE COLOR	For	Each output channels	P.74
	Default	R : 0, G : 0, B : 0	
HDCP OUTPUT MODE	For	Each output channels	P.75
	Default	HDCP 2.2	
HDCP ERROR RETRY	For	Each output channels	P.75
	Default	ETERNITY	
DEEP COLOR OUTPUT	For	Each output channels	P.76
	Default	24-BIT COLOR	
CEC CONNECTION	For	Each output channels	P.76
	Default	NOT CONNECTED	
HDCP AUTHORIZATION	For	Each output channels	P.77
	Default	---	
AUTO SWITCHING ON	For	Each output channels	P.77
	Default	OFF	
AUT SWITHING OFF	For	Each output channels	P.77
	Default	OFF	
AUTO SWITCHING MASK	For	Each output channels	P.79
	Default	0s000ms	
AUTO SWITCHING MODE	For	Each output channels	P.79
	Default	V&A	

[Table 8.9] Factory default

Menu	Factory default		See:
AUDIO			
OUTPUT LEVEL	For	Each output channels	P.81
	Default	0 dB	
OUTPUT MUTE	For	Each output channels	P.81
	Default	OFF	
AUDIO INPUT SELECT	For	Each input channel, digital input only	P.81
	Default	AUTO	
INPUT OFFSET	For	Each input channel, each input signal	P.81
	Default	0 dB	
OUTPUT LIP SYNC	For	Each output channels	P.82
	Default	0 FRAME	
INPUT LIP SYNC	For	Each input channel, each input signal	P.82
	Default	0 FRAME	
SAMPLING FREQUENCY	For	Each output channels	P.82
	Default	AUTO	
OUTPUT CONNECTOR	For	Each output channels	P.83
	Default	ANALOG&DIGITAL	
MULTIAUDIO	For	Each output channels	P.83
	Default	DOWN MIX	
TEST TONE	For	Each output channels	P.84
	Default	TEST TONE : OFF SPEAKER : ALL	

[Table 8.10] Factory default

Menu	Factory default		See:
EDID			
EDID DATA	For	Each input channel, digital input only	P.85
	Default	INTERNAL EDID	
PC RESOLUTION	For	Each input channel	P.86
	Default	IN1 to IN3 : 2160p@30 (3840x2160) IN4 to IN9 : 1080p(1920x1080)	
AV RESOLUTION	For	Each input channel, digital input only*[2]	P.88
	Default	AUTO	
DEEP COLOR INPUT	For	Each input channel, digital input only*[2]	P.89
	Default	24-BIT COLOR	
AUDIO FORMAT	For	Each input channel, digital input only*[2]	P.89
	Default	PCM : 48 kHz Dolby Digital : OFF AAC : OFF Dolby Digital+ : OFF DTS : OFF DTS-HD : OFF Dolby TrueHD : OFF	
SPEAKER	For	Each input channel digital input only*	P.90
	Default	MODE : AUTO NUMBER : 2 FL / FR : ON LFE : OFF FC : OFF RL / RR : OFF RC : OFF FLC / FRC : OFF RLC / RRC : OFF FLW / FRW : OFF FLH / RLH : OFF TC : OFF FCH : OFF FCH : OFF	
MONITOR EDID COPY	For	No.1 to No.8	P.91
	Default	---	

*[2]Can be set only if "INTERNAL EDID" is selected for the EDID.

[Table 8.11] Factory default

Menu	Factory default		See:
COM PORT			
PARAMETERS	For	EACH RS-232C CHANNEL	P.92
	Default	Baud rate : 9600 Data bit length : 8 Parity check : NONE Stop bit : 1	
FUNCTION	For	EACH RS-232C CHANNEL	P.92
LAN			
IP ADDRESS	For	---	
	Default	192.168.1.199	
SUBNET MASK	For	---	
	Default	255.255.255.0	
GATEWAY ADDRESS	For	---	
	Default	192.168.1.200	
FUNCTION	For	Each connection	P.94
	Default	Operation mode : RECEIVER IP address : 192.168.1.198 PJLink : OFF PORT : 1100 PASS WORD : 20 (Space)	
PORT NUMBER	For	Each connection	P.95
	Default	Connection1 to Connection3 : 1100 Connection4 to Connection6 : 23 Connection7 to Connection8 : 80	
MAC ADDRESS	For	---	P.95
	Default	---	

[Table 8.12] Factory default

Menu	Factory default		See:
PRESET COMMAND			
COMMAND EDIT	For	Each control command	P.98
	Default	[Table 9.19] Setting items of control command	
RECV COMMAND EDIT	For	Each reply command	P.104
	Default	[Table 9.24] Setting items of return command	
COMMAND LINK	For	Each control command execution condition	P.107
	Default	OFF	
COMMAND EXECUTION	For	---	P.108
	Default	---	
INVALID TIME	Set value	0s000ms to 999s999ms	P.108
	For	---	
	Default	0s000ms	
INITIALIZE	For	---	P.108
	Default	---	
COMMAND TALLY	For	Each control command execution key	
	Default	REGISTERED	
FLASH TIME	For	Each control command execution key, each sink device power key	
	Default	EXECUTION	
PRESET MEMORY			
LOAD CROSS POINT	For	---	P.111
	Default	---	
SAVE CROSS POINT	For	---	P.111
	Default	---	
EDIT CROSS POINT	For	Each cross point memory	P.112
	Default	Video input channel : --- Audio input channel : --- Memory name : 20 (space)	
LOAD ALL SETTING	For	---	P.113
	Default	---	
SAVE ALL SETTING	For	---	P.114
	Default	---	
COPY OUTPUT MEMORY	For	---	P.115
	Default	---	
STARTUP	For	---	P.116
	Default	LAST CHANNEL	

[Table 8.13] Factory default

Menu	Factory default		See:
BITMAP			
BITMAP OUTPUT	For	Each output channels	P.119
	Default	OFF	
BACKGROUND COLOR	For	Each output channels, each bitmap	P.119
	Default	R : 255 G : 255 B : 255	
ASPECT	For	Each output channels, each bitmap	P.119
	Default	AUTO	
POSITION	For	Each output channels, each bitmap	P.120
	Default	CENTER	
CHANNEL ASSIGN	For	Each output channels	P.120
	Default	OFF	
POWER ON BITMAP	For	Each output channels	P.120
	Default	OFF	
DIVIDE MEMORY*[3]	For	---	P.121
	Default	MODE : RESIZE NUMBER : 1 DISPLAY : BLOCK SIZE : 127	
VIDEO CAPTURE	For	---	P.123
	Default	---	
POWER ON SETTING			
POWER SWITCH	For	---	
	Default	AUTO	
DISPLAY POWER	For	Each output channels	P.126
	Default	AUTO	
UNLOCK BUTTON	For	---	P.127
	Default	AUTO	
OPERATION LOCK	For	---	P.128
	Default	AUTO	

*[3]The default values and registered bitmaps are not initialized by the initialization.

[Table 8.14] Factory default

Menu	Factory default		See:
OTHERS			
OP LOCK MODE	For	CHANNEL CHANNEL MODE MENU PRESET LOAD COMMAND COMMAND MODE DISPLAY POW	P.129
	Default	LOCK	
BUZZER	For	---	P.131
	Default	ON	
COMMAND AUTO LOCK	For	---	P.131
	Default	ON	
POWER SAVE	For	---	P.131
	Default	ON	
DISP POW BUTTON ON	For	---	P.131
	Default	0 ms	
INPUT CHANNEL LINK	For	---	P.132
	Default	VIDEO : OFF AUDIO : OFF	
TOP DISPLAY	For	---	P.133
	Default	NORMAL	
INPUT STATUS	For	---	P.134
	Default	---	
MONITOR STATUS	For	---	P.136
	Default	---	
EDID STATUS	For	---	P.138
	Default	---	
VERSION	For	---	P.139
	Default	---	

[Table 8.15] Setting condition

Setting range	Description
Each output channels	Can be set for each output channels
Each input signal	Can be set for each input signal
Each input channel	Can be set for each input channel
Each input channel digital input only	Can be set for each input channel only if input channel is digital signal
Each input channel analog input only	Can be set for each input channel only if input channel is analog signal
Each input channel DVI connector only	Can be set for each input channel of DVI input connector
EACH RS-232C CHANNEL	Can be set for RC-232C channel
Each connection	Can be set for LAN connection
Each bitmap	Can be set for each bitmap

8.8 Web menu operation

The MSD connected through a LAN can be controlled from a WEB browser, such as Microsoft Internet Explorer. JavaScript is used for the WEB browser screen. To do this, make sure to enable JavaScript of the WEB browser by referring to the HELP of each WEB browser.

Tip:
We have checked the opration in the following conditions.
OS: Windows 7 Professional
WEB browser: Microsoft Internet Explorer 11
Google Chrome 56
Mozilla Firefox 51

8.8.1 Control from WEB browser

To control the MSD from a WEB browser, type the IP address that is set to the MSD in the address bar of the WEB browser to display the WEB menu.

You can control the MSD via LAN from a web browser, such as Microsoft Internet Explorer.

【See: 9.11.1 IP address/Subnet mask/Gateway address】
【See: 9.11.3 TCP port number】

[Table 8.16] Address input example

Control port number of web browser	IP address (URL)
80 (Normal)	http://192.168.1.199
Other than 80 (5000 to 5999)	http://192.168.1.199:5000 (ex: 5000)

8.8.2 How to use WEB menu

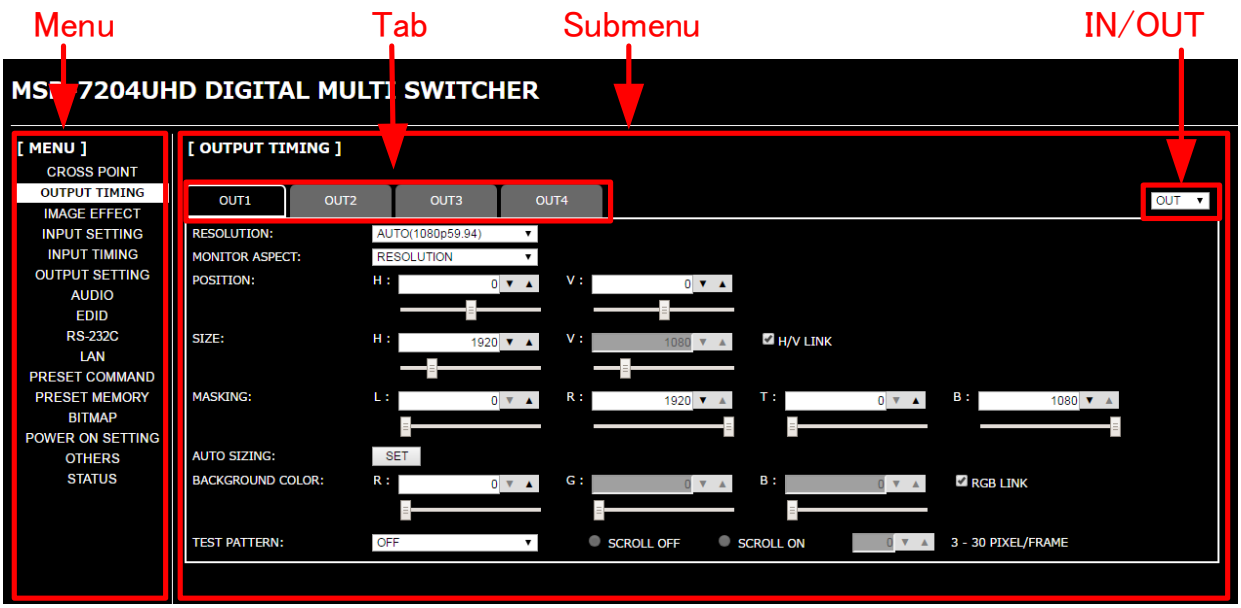

[Fig. 8.6] WEB menu

① Select the target item from the menu.
Setting items will be displayed in the sub menu.
If the setting item can be set for each input or output side, the display can be changed using the pull-down menu, "IN/OUT", placed at the right side of the submenu.

② If there is a setting item that can be set for each channel, channel tab will be displayed.

③ Set the each setting from the submenu by following the table below.

[Table 8.17] Button for setting

Button name	Button	Description
Execution button	SET	Exexutes the target operation.
Pull-down list	OUT1 ▼	Selects the desired value.
Spin button	100 ▲ ▼	Selects the desired value. You can type the desired value directly in the text area.
Slider bar		You can move the slider to set the desired value.
Check box	☑ RGB LINK	Enables and disables by clicking or unclicking the box.
Radio button	◉ SCROLL OFF ○ SCROLL ON	Selects the desired value.

Tip:
You can change the channel name displayed in the tab from "NAME EDIT" in the "CROSS POINT".

9 Menu

9.1 Menu list

Followings are menu tree of the MSD:

【See: 8.3 Menu operation (P.31) 】

```
Top
 ├── Main menu
 │    ├──Submenu
 │    ├

MSD-7204UHD / MSD-7204UHDTB
MSD-7203UHD / MSD-7203UHDTB
MSD-7202UHD / MSD-7202UHDTB
MSD-7201UHD / MSD-7201UHDTB
 │
 │ / * 9.3 Setting position, size, and masking
(P.52) * /
 ├──OUTPUT TIMING
 │    ├──RESOLUTION
 │    ├──MONITOR ASPECT
 │    ├──INPUT ASPECT
 │    ├──ASPECT PROCESS
 │    ├──INPUT OVER SCAN
 │    ├──INPUT POSITION
 │    ├──INPUT SIZE
 │    ├──INPUT MASKING
 │    ├──INPUT AUTO SIZING
 │    ├──OUTPUT POSITION
 │    ├──OUTPUT SIZE
 │    ├──OUTPUT MASKING
 │    ├──OUTPUT AUTO SIZING
 │    ├──BACKGROUND COLOR
 │    └──TEST PATTERN
 │
 │ / * 9.4 Quality setting (P.58) * /
 ├──IMAGE EFFECT
 │    ├──INPUT SHARPNESS
 │    ├──INPUT GRIGHTNESS
 │    ├──INPUT CONTRAST
 │    ├──INPUT HUE
 │    ├──INPUT SATURATION
 │    ├──INPUT SETUP LEVEL
 │    ├──INPUT DEFAULT COLOR
 │    ├──OUTPUT BRIGHTNESS
 │    ├──OUTPUT CONTRAST
 │    ├──OUTPUT GAMMA
 │    └──OUT DEFAULT COLOR
 │
```

```
 │ / * 9.5 Input settings (P.61) * /
 ├──INPUT SETTING
 │    ├──INPUT VIDEO DETECT
 │    ├──HDCP INPUT ENABLE
 │    ├──ANALOG INPUT TYPE
 │    ├──INPUT OFF CHECK
 │    ├──INPUT AD TYPE
 │    └──INPUT TABLE FIXED
 │
 │ / * 9.6 Setting input timing (P.66) * /
 ├──INPUT TIMING
 │    ├──AUTO SETUP
 │    ├──H TOTAL DOTS
 │    ├──H START
 │    ├──H DISPLAY
 │    ├──V START
 │    ├──V DISPLAY
 │    ├──AUTO START POS
 │    ├──UNKNOWN TIMING
 │    ├──LOAD
 │    ├──SAVE
 │    └──TRACKING
 │
 │ / * 9.7 Output settings (P.73) * /
 ├──OUTPUT SETTING
 │    ├──OUTPUT MODE
 │    ├──SYNC OUTPUT
 │    ├──VIDEO OUTPUT
 │    ├──VIDEO SWITCHING
 │    ├──SWITCHING SPEED
 │    ├──WIPE COLOR
 │    ├──HDCP OUTPUT MODE
 │    ├──HDCP ERROR RETRY
 │    ├──DEEP COLOR OUTPUT
 │    ├──CEC CONNECTION
 │    ├──HDCP AUTHORIZATION
 │    ├──AUTO SWITCHING ON
 │    ├──AUTO SWITCHING OFF
 │    ├──AUTO SWITCHING MASK
 │    └──AUTO SWITCHING MODE
 │
```

[Figure 9.1] Menu list (1/2)

```
│ / ∗ 9.8 Audio settings (P.80) ∗ /
├──AUDIO
│    ├──OUTPUT LEVEL
│    ├──OUTPUT MUTE
│    ├──AUDIO INPUT SELECT
│    ├──INPUT OFFSET
│    ├──OUTPUT LIP SYNC
│    ├──INPUT LIP SYNC
│    ├──SAMPLING FREQUENCY
│    ├──OUTPUT CONNECTOR
│    ├──MULTI AUDIO
│    └──TEST TONE
│
│ / ∗ 9.9 EDID (P.85) ∗ /
├──EDID
│    ├──EDID DATA
│    ├──PC RESOLUTION
│    ├──AV RESOLUTION
│    ├──DEEP COLOR INPUT
│    ├──AUDIO FORMAT
│    ├──SPEAKER
│    └──MONITOR EDID COPY
│
│ / ∗ 9.10 RS-232C (P.92) ∗ /
├──COM PORT
│    ├──PARAMETERS
│    └──FUNCTION
│
│ / ∗ 9.11 LAN (P.93) ∗ /
├──LAN
│    ├──IP ADDRESS
│    ├──SUBNET MASK
│    ├──GATEWAY ADDRESS
│    ├──FUNCTION
│    ├──PORT NUMBER
│    └──MAC ADDRESS
│
│ / ∗ 9.12 Setting control command (P.96)
∗ /
├──PRESET COMMAND
│    ├──COMMAND EDIT
│    ├──RECV COMMAND EDIT
│    ├──COMMAND LINK
│    ├──COMMAND EXECUTION
│    ├──INVALID TIME
│    ├──INITIALIZE
│    ├──COMMAND TALLY
│    └──FLASH TIME
```

```
│ / ∗ 9.13 Preset memory (P.111) ∗ /
├──PRESET MEMORY
│    ├──LOAD CROSS POINT
│    ├──SAVE CROSS POINT
│    ├──EDIT CROSS POINT
│    ├──LOAD ALL SETTING*1
│    ├──SAVE ALL SETTING
│    ├──COPY OUTPUT MEMORY
│    └──STARTUP
│
│ / ∗ 9.14 Setting bitmap (P.117) ∗ /
├──BITMAP
│    ├──BITMAP OUTPUT
│    ├──BACKGROUNG COLOR
│    ├──ASPECT
│    ├──POSITION
│    ├──CHANNEL ASSIGN
│    ├──POWER ON BITMAP
│    ├──DIVIDE MEMORY
│    └──VIDEO CAPTURE
│
│ / ∗ 9.15 Startup settings (P.125) ∗ /
├──POWER ON SETTING
│    ├──POWER SWITCH
│    ├──DISPLAY POWER
│    ├──UNLOCK BUTTON
│    └──OPERATION LOCK
│
│ / ∗ 9.16   Other settings (P.129) ∗ /
└──OTHERS
     ├──OP LOCK MODE
     ├──BUZZER
     ├──COMMAND AUTO LOCK
     ├──POWER SAVE
     ├──DISP POW BUTTON ON
     ├──INPUT CHANNEL LINK*2
     ├──TOP DISPLAY
     ├──INPUT STATUS
     ├──MONITOR STATUS
     ├──EDID STATUS
     └──VERSION
```

*1 Displayed if preset memory is saved.

*2 Models having two or more outputs support this menu.

[Figure 9.2] Menu list (2/2)

9.2 Input Signal Automatic Detection

The MSD continuously monitors input signal. If input signal that have been input before, they are output with the same size and quality of view used previously. If input signal is not matched with any signal that have been input before, only settings of input timing is initialized and other settings are not changed. Adjust the size and quality of view as necessary.

【See: 9.3 Setting position, size, and masking】
【See: 9.4 Quality setting】
【See: 9.6 Setting input timing】

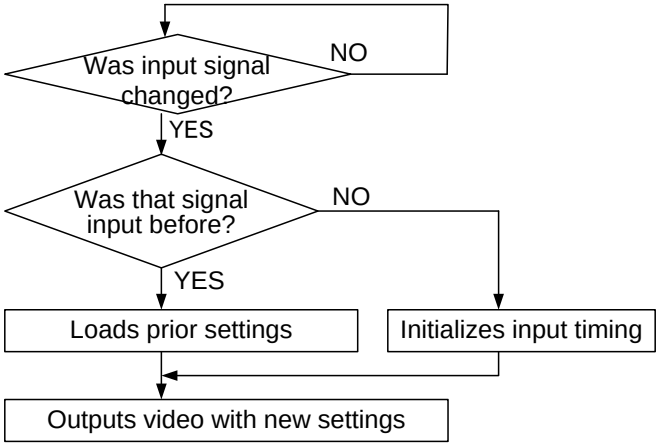

[Figure 9.3] How signal is recognized

The MSD saves data of 50 input devices for each channel, and the data is used to check whether the input signal have been input before or not. To save the data of the 51st device, the oldest data that have not been input recently will be deleted, instead.

	IN1	IN2	IN3	IN4	IN5	IN6	IN7	IN8	IN9
1	1080i	1080i	UXGA	UXGA	WXGA	WXGA	WXGA	NTSC	NTSC
2	720p	480i	WXGA	VGA	SVGA	SVGA	SVGA	WXGA	WXGA
3	480i		SXGA+						
4	XGA								
5	SXGA								
6	UXGA								
⋮									
49	VGA								
50	1080p								

Data of 50 devices for each input connector can be saved.

When a new signal is input, the oldest signal is deleted.

[Figure 9.4] Memory table per channel

The following items are saved for each input signal.

[Table 9.1] Items saved for each input signal

Setting	Item
Setting position, size, and masking	Aspect ratio, Aspect ratio control, Overscan, Display position, Display size, Masking
Quality setting	Sharpness, Brightness, Contrast, HUE, Saturation, Black level
Input settings	Signal type of analog input
Setting input timing	The total number of horizontal dots, Start position, Active area, Automatic measurement of start position, Tracking
Audio settings*	Input level, Lip sync

* Only if digital audio input is selected, settings of Input level and Lip sync are saved.

9.3 Setting position, size, and masking

Position, size, and masking can be set for input side and output side. Normally, set them for input side. If edges are cut off due to enlarged display in the sink device side or if enlarging output video for all inputs at once, set them for the output side.

9.3.1 Output resolution

Menu	Top→OUTPUT TIMING→RESOLUTION
Setting for	Each output channel
Setting values	

・AUTO [Default]		・VESAHD@60	(1920x1080)	・1080p@50	(1920x1080)
・VGA@60	(640x480)	・WUXGA@60	(1920x1200)	・1080p@59.94	(1920x1080)
・SVGA@60	(800x600)	・QWXGA@60	(2048x1152)	・1080p@60	(1920x1080)
・XGA@60	(1024x768)	・WQHD@60	(2560x1440)	・2160p@24	(3840x2160)
・WXGA@60	(1280x768)	・WQXGA@60	(2560x1600)	・2160p@25	(3840x2160)
・WXGA@60	(1280x800)	・480i@59.94	(720x480)	・2160p@30	(3840x2160)
・Quad-VGA@60	(1280x960)	・480p@59.94	(720x480)	・2160p@50	(3840x2160)
・SXGA@60	(1280x1024)	・576i@50	(720x576)	・2160p@60	(3840x2160)
・WXGA@60	(1360x768)	・576p@50	(720x576)	・2160p@24(4096)	(4096x2160)
・WXGA@60	(1366x768)	・720p@50	(1280x720)	・2160p@25(4096)	(4096x2160)
・SXGA+@60	(1400x1050)	・720p@59.94	(1280x720)	・2160p@30(4096)	(4096x2160)
・WXGA+@60	(1440x900)	・720p@60	(1280x720)	・2160p@50(4096)	(4096x2160)
・WXGA++@60	(1600x900)	・1080i@50	(1920x1080)	・2160p@60(4096)	(4096x2160)
・UXGA@60	(1600x1200)	・1080i@59.94	(1920x1080)		
・WSXGA+@60	(1680x1050)	・1080i@60	(1920x1080)		

Normally, the optimal resolution will be selected automatically if you set this menu to "AUTO".

Numbers following "@" are vertical synchronous frequency.
480i / 480p / 576i / 576p / 720p / 1080i / 1080p / 2160p are the timings of CEA-861E standard.
Others are timings meeting VESA DMT standard or VESA CVT standard. VESAHD@60, WUXGA@60, QWXGA@60, WQHD@60, and WQXGA@60 are output with Reduced Blanking.

■"AUTO"

"AUTO": selects the optimal resolution depending on the EDID of the connected sink device, and outputs video signal to the HDMI output connector. At this time, the resolution that is actually output is displayed in parentheses. In case EDID cannot be loaded from the sink device, the resolution that was used in the last time is selected with "*" on its right side.

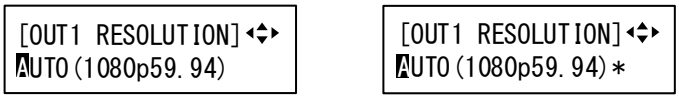

[Figure 9.5]

Left: optimal resolution

Right: EDID cannot be loaded or the MSD cannot output the optimal resolution

9.3.2 Aspect ratio for sink device

Mene Top→OUTPUT TIMING→MONITOR ASPECT
Setting for Each output channel
Setting value

- RESOLUTION [Default]
- 5:4
- 16:9
- 256:135
- 4:3
- 5:3
- 16:10

You can set the aspect ratio of the connected sink device.
If you select "RESOLUTION", the aspect ratio of the resolution selected in "Output resolution" will be applied.
If aspect ratio of the target sink device and the ratio set in "Output resolution" are different from each other, you can select an aspect ratio of the sink device from "4:3", "5:4", "5:3", "16:9", "16:10", and "256:135" (4096x2160).

【See: 9.3.1 Output resolution】

9.3.3 Aspect ratio

Menu Top→OUTPUT TIMING→INPUT ASPECT
Setting for Each input connector, each input signal
Setting value

- AUTO-1 [Default]
- 14:9
- 14:9 SIDE PANEL
- AUTO-2
- 16:9 LETTER BOX
- FULL
- 4:3
- 14:9 LETTER BOX
- THROUGH
- 16:9
- 4:3 SIDE PANEL

You can set the aspect ratio of input video.
If you select "AUTO-1" or "AUTO-2", the aspect ratio is restored automatically to the original ratio according to the settings of sink device aspect ratio and aspect ratio control.
"AUTO-1" and "AUTO-2" work differently only when letter box signal is input. "AUTO-1" processes them as video signal of 16:9 or 14:9 while "AUTO-2" sets them as 4:3.
Normally, no problem occurs if you set the aspect ratio to "AUTO-1", but some DVD players and other devices display subtitles or setup menus on the area that does not have letter box signal video, which may not be displayed within the screen. In such case, set the aspect to "AUTO-2" to display the whole video.

【See: 9.3.2 Aspect ratio for sink device】
【See: 9.3.4 Aspect ratio control】

Settings of "16:9", "14:9", "4:3", "16:9 / 14:9 LETTER BOX", and "4:3 / 14:9 SIDE PANEL" are enabled only when TV signal is input. When PC signal is input, the aspect ratio will be restored automatically according to the aspect of the input signal regardless of settings of "AUTO-1", "AUTO-2", "16:9", "14:9", "4:3", "16:9/14:9 LETTER BOX", and "4:3/14:9 SIDE PANEL".

"FULL": video signal is displayed always on full screen regardless of input video signal and settings of **"9.3.2 Aspect ratio for sink device"** and **"9.3.4 Aspect ratio control"**.

"THROUGH": video signal is displayed always in pixel 1:1 regardless of settings of **"9.3.2 Aspect ratio for sink device"** and **"9.3.4 Aspect ratio control"**.

9.3.4 Aspect ratio control

Menu	Top→OUTPUT TIMING→ASPECT PROCESS
Setting for	Each input channel, each input signal
Setting value	L-BOX/S-PANEL : letter box/side panel [Default]
	S-CUT/TB-CUT : Side cut/top bottom cut

You can get how to restore aspect ratio.

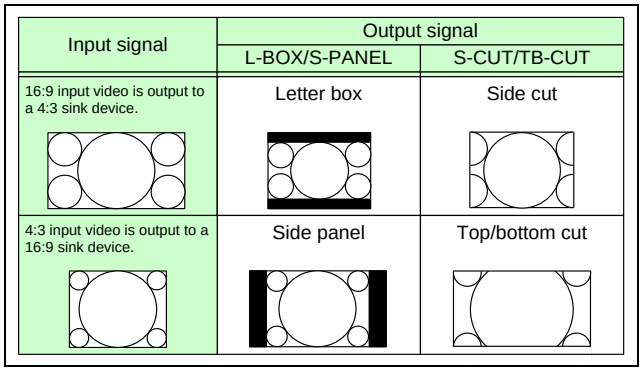

[Figure 9.6] Restoring aspect ratio

9.3.5 Overscan

Menu	Top→OUTPUT TIMING→INPUT OVER SCAN
Setting for	Each input channel, each input signal
Setting value	100% to 115%
	[Default] NTSC / PAL / SDTV: 105%; HDTV / PC: 100%

You can set enlarged display of input video.

Note:
This menu can be set up to 115%, but if the dot clock of input signal exceeds 170 MHz, it is treated as 100%. In this case, "*" is displayed on the VFD screen.

9.3.6 Display position

Menu	Top→OUTPUT TIMING→INPUT POSITION (Input side) / OUTPUT POSITION (Output side)
Setting for	Input side : Each input channel, each input signal
	Output side : Each output channel
Setting value	

Input side:

Horizontal position	(-Horizontal input size	to	+Horizontal output resolution	[Default] 0)
Vertical position	(-Vertical input size	to	+Vertical output resolution	[Default] 0)

Output side:

Horizontal position	(-Horizontal output size	to	+Horizontal output resolution	[Default] 0)
Vertical position	(-Vertical output size	to	+Vertical output resolution	[Default] 0)

You can set the position where input video is displayed.

Note:
If the resolutions of each output are not the same, the resolution of OUT1 will be the standard.

9.3.7 Display size

Menu	Top→OUTPUT TIMING→INPUT SIZE (Input side) / OUTPUT SIZE (Output side)			
Setting for	Input side	: Each input channel, each input signal		
	Output side	: Each output channel		
Setting value				
Input side:	Horizontal size	(Horizontal output resolution÷4 [Default] Horizontal output resolution)	to	Horizontal output resolution x 4
	Vertical size	(Vertical output resolution÷4 [Default] Vertical output resolution)	to	Vertical output resolution x 4
Output side:	Horizontal size	(Horizontal output resolution÷4 [Default] Horizontal output resolution)	to	Horizontal output resolution x 4
	Vertical size	(Vertical output resolution÷4 [Default] Vertical output resolution)	to	Vertical output resolution x 4

You can set the display size of input video.
The video size is scaled based on the upper left of the input video.
If you set "LINK" to "ON", only settings of "H"(Horizontal) can be set and "V" is set automatically with the current aspect ratio kept.

【See: 9.3.6 Display position】

Notes:

・If the resolutions of each output are not the same, the output resolution of OUT1 will be the standard.
・Numbers following "/" show the output resolution

9.3.8 Masking

Menu	Top→OUTPUT TIMING→INPUT MASKING (Input side) / OUTPUT MASKING (Output side)
Setting for	Input side : Each input channel, each input signal Output side : Each output channel
Setting value	

Input side:	Left side masking	(Horizontal input position to Right side masking [Default] 0)
	Right side masking	(Left side masking to Horizontal input position＋Horizontal input size [Default] Horizontal input size)
	Top side masking	(Vertical input position to Bottom side masking [Default] 0)
	Bottom side masking	(Top side masking to Vertical input position＋Vertical input size [Default] Vertical input size)
Output side:	Left side masking	(Horizontal output position (0 or more) to Right side masking [Default] 0)
	Right side masking	(Left side masking to Horizontal output position＋Horizontal output size (Horizontal output resolution or less) [Default] Horizontal output resolution)
	Top side masking	(Vertical output position (0 or more) to Bottom side masking [Default] 0)
	Bottom side masking	(Top side masking to Vertical output position＋Vertical output size (Vertical output resolution or less) [Default] Vertical output resolution)

You can set the masking of input video to hide unnecessary area (top/bottom and right/left).

9.3.9 Automatic sizing

Menu	Top→OUTPUT TIMING→INPUT AUTO SIZING (Input side) / OUTPUT AUTO SIZING (Output side)
Setting for	Input side : Each input channel, each input signal Output side : Each output channel

This function adjusts output signal optimally, and as a result, the following settings will be initialized automatically.
A long buzzer will sound when the initialization is completed by pressing the MENU/SET key.

[Table 9.2] Items to be initialized

Items to be initialized	Input side	Output side
Aspect ratio, ovescan	Initialized	-
Display position, display size, masking	Initialized	Initialized

9.3.10 Background color

Menu	Top→OUTPUT TIMING→BACKGROUND COLOR
Setting for	Each output channel
Setting value	R / G / B: 0 to 255 [Default]R / G / B: 0 (black)

You can set the background color of output video.
If you set "LINK" to "ON", only settings of "R" can be set, and "G" and "B" change relatively.

9.3.11 Test pattern

Menu	Top→OUTPUT TIMING→TEST PATTERN
Setting for	Each output channel
Setting value	[Figure 9.7] Test pattern

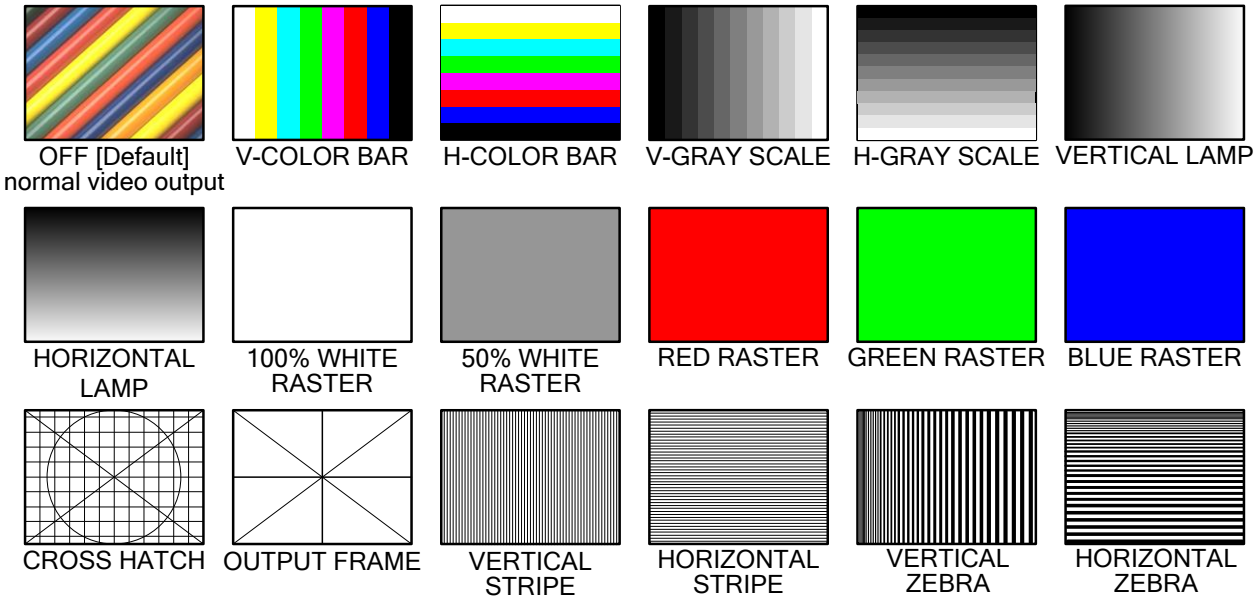

[Figure 9.7] Test pattern

You can select a test pattern to be output instead of displaying video.
All settings of **"9.4 Quality setting"** will be invalid while a test pattern is displayed.

For "OUTPUT FRAME": use this pattern if edges are cut off due to enlargement display on the sink device. Settings of "**9.3.6 Display position"** and "**9.3.7 Display size"** in the output side will be adjusted in order to display the test pattern on full screen.

For test patterns other than "OUTPUT FRAME": video is output on full screen with the resolution set in "**9.3.1 Output resolution"** and the settings of "**9.3.6 Display position"**, "**9.3.7 Display size"**, and "**9.3.8 Masking"** will be invalid.

You can scroll "COLOR BAR","GRAY SCALE","LAMP", and "ZEBRA" by using arrow keys (▶, ▲, ▼). The scroll speed can be set by 3 pixels/a frame up to 30 pixels/ a frame with ▲ and ▼ keys.
You can check the residual image (resolution of moving picture) by displaying "ZEBRA".

9.4 Quality settings

Setting items for input channels are for correcting color bias.
Image quality to be output can be set for each input side (input channels) and output side (output channels) as follows.

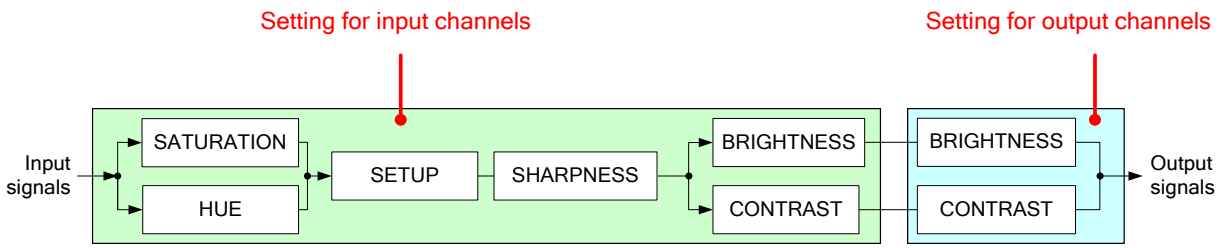

[Figure 9.8] Video correction

9.4.1 Sharpness

Menu	Top→IMAGE EFFECT→INPUT SHARPNESS
Setting for	Each input channel, each input signal
Setting value	-5 to +15 [Default]:0

You can set the sharpness of input signal.

9.4.2 Brightness

Menu	Top→IMAGE EFFECT→INPUT BRIGHTNESS (Input side) /OUTPUT BRIGHTNESS (Output side)
Setting for	Input side : Each input channel, each input signal Output side : Each output channel
Setting value	80% to 120% [Default]:100%

You can set the brightness of input/output signal.

9.4.3 Contrast

Menu	Top→IMAGE EFFECT→INPUT CONTRAST (Input side) / OUTPUT CONTRAST (Output side)
Setting for	Input side : Each input channel, each input signal Output side : Each output channel
Setting value	R / G / B : 0% to 200% [Default]:R / G / B: 100%

You can set the contrast of video image.
If you set "LINK" to "ON", only settings of "R" can be set, and "G" and "B" change relatively.

9.4.4 HUE

Menu	Top→IMAGE EFFECT→INPUT HUE
Setting for	Each input channel, each input signal
Setting value	0° to 359° [Default]: 0°

You can set HUE of input signal.

Note:
This menu can be set up to 359°, but if the dot clock of input signal exceeds 170 MHz, it is treated as 0°. In this case, "*" is displayed on the VFD screen.

9.4.5 Saturation

Menu	Top→IMAGE EFFECT→INPUT SATURATION
Setting for	Each input channel, each input signal
Setting value	0% to 200% [Default]:100%

You can set the saturation of input signal.

Note:
This menu can be set up to 200%, but if the dot clock of input signal exceeds 170 MHz, it is treated as 100%. In this case, "*" is displayed on the VFD screen.

9.4.6 Black level

Menu	Top→IMAGE EFFECT→INPUT SETUP LEVEL
Setting for	Each input channel, each input signal
Setting value	-100% to +100% (by 0.5%) [Default]: ±0.0%

You can adjust the black level of input signal.

9.4.7 Gamma

Menu	Top→IMAGE EFFECT→OUTPUT GAMMA
Setting for	Each output channel
Setting value	0.1 to 3.0 (0.1 steps) [Default]: 1.0

You can adjust the gamma of output signal.

9.4.8 Default color

Menu	Top→IMAGE EFFECT→IN DEFAULT COLOR (Input side) / OUT DEFAULT COLOR (Output side)
Setting for	Input side : Each input channel, each input signal Output side : Each output channel

You can initialize settings of the following items.
A long buzzer will sound when the initialization is completed by pressing the MENU/SET key.

[Figure 9.9] Items to be initialized

Items to be initialized	Input side	Output side
Brightness, contrast	Initialized	Initialized
Sharpness, hue, saturation, black level	Initialized	-
Gamma	-	Initialized

9.5 Input settings

9.5.1 No-signal input monitoring

Menu	Top→INPUT SETTING→INPUT VIDEO DETECT
Setting for	Each input channel (only digital input signal)
Setting value	OFF, 2000ms to 15000ms (100 ms steps) [Default]: 10000ms

If you change the settings of EDID of the MSD or turn off/on the MSD, the source device may not output video signal. Use this menu to set the monitoring time which is from when a source device stops outputting signal to when the MSD requests the source device to output video signal.

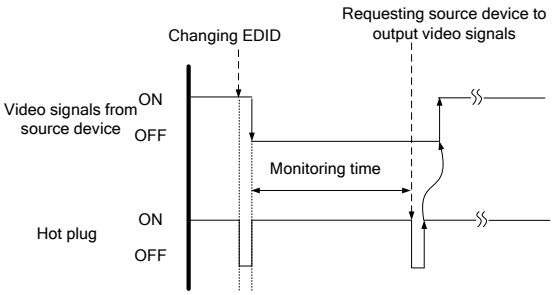

[Figure 9.10] Monitoring absence of input

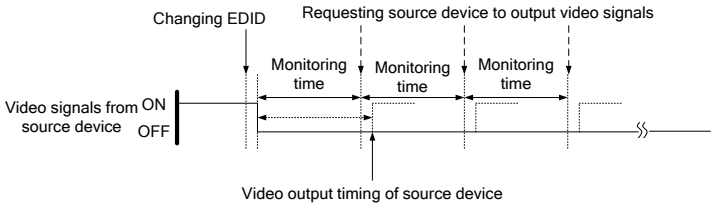

[Figure 9.11] Repeating reset

Note:
If you use the monitor power-saving function or Dual monitor function of the PC, set this menu to "OFF". The PC that receives output request may cancel those functions.

If you set shorter time than the time which the source device outputs video, the source device may not output video. In such case, set the longer time.

9.5.2 Setting HDCP input

Menu	Top→INPUT SETTING→HDCP INPUT ENABLE
Setting for	Each input channel (only digital input signal)
Setting value	

HDCP 2.2 : Supports HDCP 2.2 and HDCP 1.4 [Default]: IN1 to IN3
HDCP 1.4 : Supports HDCP 1.4 [Default]: IN4 to IN9
DISABLE : Not support HDCP

Some source devices check whether the connected device supports HDCP and then those source devices decide whether they encrypt HDCP signal or not. Since the MSD is HDCP compliant, if it is connected to a display device that does not support HDCP, video may not be displayed. In these cases, the problem can be solved by setting this menu to "DISABLE".

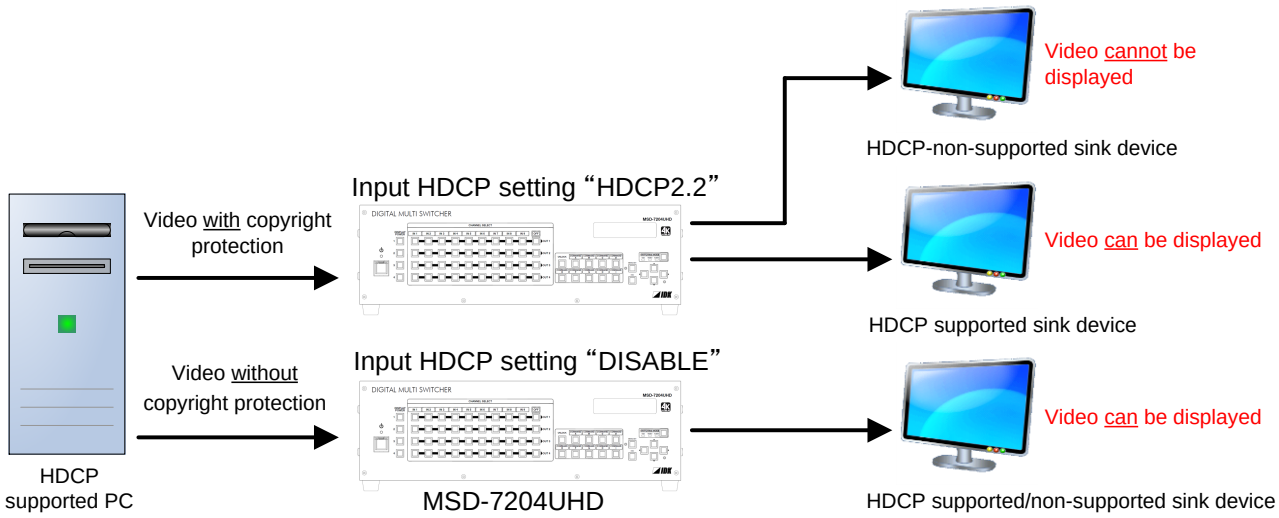

[Figure 9.12] HDCP-supported and HDCP-non-supported display devices

Notes:

- HDCP2.2 (stream type 0) contents can be displayed on sink devices supporting HDCP1.4.
- HDCP2.2 (stream type 1) contents can be displayed on sink devices supporting HDCP2.2 but cannot be displayed on sink devices supporting HDCP1.4.

9.5.3 Signal type of analog input

Menu	Top→INPUT SETTING→ANALOG INPUT TYPE
Setting for	Each input channel, each input signal (only analog input)
Setting value	

- AUTO : Automatic [Default]
- RGB : Analog RGB
- YPbPr : Analog YPbPr
- VIDEO AUTO : Video automatic
- VIDEO : Composite video
- Y/C : S video

You can set the signal type that is input from the DVI-I input connector.

If you select "AUTO", the type of input signal is detected automatically. In cases where the detection fails and video is not output correctly, set the input type manually. With "AUTO", the automatic detection of S-Video may fail. If both composite video and S-Video are input at the same time, select "VIDEO AUTO"; if only S-Video is input, select "Y/C".
This menu is available only if analog signal is input to IN8 or IN9.

Note:
For video of a monochrome camera or VHS tape with a bad recording condition or the like, automatic detection may fail. In these cases, select "VIDEO AUTO", "VIDEO" or "Y/C".

9.5.4 Automatic detection of input video intertuption

Menu	Top→INPUT SETTING→INPUT OFF CHECK
Setting for	Each input channel
Setting value	ON [Default], OFF

The MSD can stop outputting video immediately after input video signal is disconnected for a moment.
Use this function to reduce distorted output video occurred at the time of switching if an external switcher is connected for input of the MSD. The processing of this function is the same as that of switching input.

- **9.7.4 Window transaction effect**
- **9.7.5 Window transaction speed**
- **9.7.6 Wipe color**

Notes:

- If you select "ON" and input video (VHS tapes or the like) that has a bad record condition, outputting video will be ON/OFF repeatedly due to distorted synchronous idles. In this case, set this menu to "OFF".

- Even if you set this item to "ON", distorted video cannot be corrected completely when input video signal is lost. Especially if you set **"9.7.4 Window transaction effect"** to an option other than "CUT", noises or black bars may be output at the time of fading out or wiping out.

9.5.5 Selecting signal of DVI input connector

Menu	Top→INPUT SETTING→INPUT AD TYPE
Setting for	Each input channel (only DVI input connector)
Setting value	DIGITAL [Default], ANALOG

You can select input signal of DVI input connector (IN8 and IN9) between digital and analog.

9.5.6 Fixing settings for each input signal

Menu	TOP→INPUT SETTING→INPUT TABLE FIXED
Setting for	Each input channel
Setting value	

Setting mode：

- SELECTED ：Sets for each item [Default]
- ALL FIXED ：Does not load settings saved for each input signal but fixes the current settings

Individual setting (if "SELECTED" is selected for the setting mode)

- ASPECT ：OFF [Default], ON(FIXED) 【See: 9.3.3 Aspect ratio】
- ANALOG TYPE ：OFF, ON(FIXED) [Default] 【See: 9.5.3 Signal type of analog input】
- AUDIO LEVEL ：OFF, ON(FIXED) [Default] 【See: 9.8.4 Input level】

The MSD consinuously monitors input signal. If input signal that has been input before is input, it can be output with the size and quality.

【See: 9.2 Input Signal Automatic Detection】

You can select the setting saved for each signal or the current setting.

"ALL FIXED": Does not load all settings saved for each input signal but outputs the video witht the current setting.
"SELECTED": Aspect ratio, analog input signal type and audio input level can be set individually. For setting items other than settings in [Table 9.1], settings saved for each input signal are used.
"OFF": Settings saved for each input signal are used to output the video.
"ON(FIXED)":Current setting are used to output the video.

[Table 9.3] Individual setting for each digital or analog signal

Individual setting	Digital signal (IN1 to IN9*)	Analog signal (IN8 and IN9*)
ASPECT	Can be set	Can be set
ANALOG TYPE	Cannot be set	Can be set
AUDIO LEVEL	Can be set	Cannot be set

*IN8 and IN9: Digital and analog signal can be input
For signal election, see **"9.5.5 Selecting signal of DVI input connector"**.

9.6 Setting input timing

You can set input timing of analog input video if signal is input.
Since the MSD loads the optimal table from the built-in tables and adjusts the input timing automatically, you do not need to set this menu. However, if signal which are not registered in the MSD tables are input or if part of the output video is cut off by using the standard table registered in the MSD, set the input timing manually.
For digital inputs, you do not need to set the input timing, but if part of the video is cut off, adjust the input timing finely.

[Table 9.4] Settable items

Function	Analog input	Digital input
Automatic measurement	Partly 1	Cannot be set
The total number of horizontal dots	Partly 1, Partly 2	Partly 2
Start position	Can be set	Can be set
Active area	Can be set	Can be set
Automatic measurement of start position	Can be set	Cannot be set
Automatic setting of input timing	Can be set	Cannot be set
Loading device data	Partly 3	Can be set
Registering device data	Partly 1	Cannot be set
Tracking	Partly 1	Cannot be set

Partly 1: can be set only if analog RGB / analog YPbPr signal is input.
Partly 2: only displayed if analog video signal is input or for digital input.
Partly 3: can be set only if the device data of input signal is registered in the MSD.

9.6.1 Automatic measurement

Menu	Top → INPUT TIMING → AUTO SETUP
Setting for	Each input channel, each input signal
Setting value	

・NORMAL MODE [Default] ・4:3 ・5:3 ・16:10
・NEXT ASPECT ・5:4 ・16:9

Analog RGB/analog YPbPr input video is measured to set **"9.6.2 The total number of horizontal dots"**, **"9.6.3 Start position"**, **"9.6.4 Active area"**, and **"9.6.9 Tracking"** automatically.

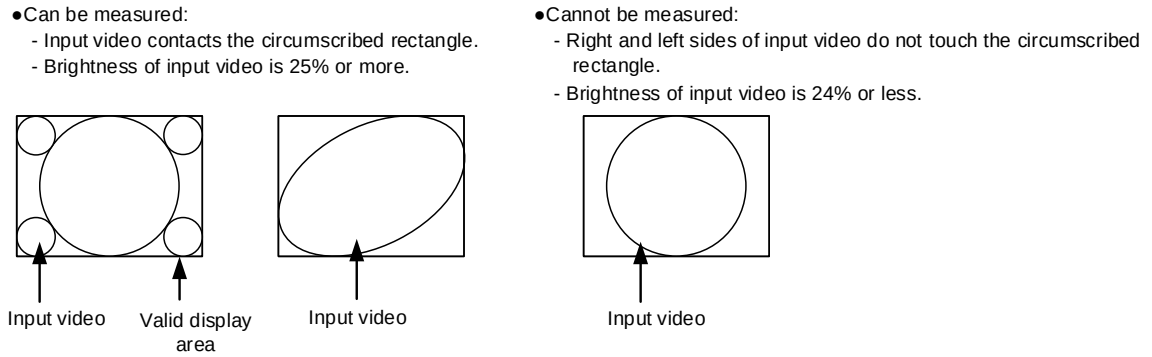

[Figure 9.13] Conditions of automatic measurement

Normally, select "NORMAL MODE" (Automatic measurement of start position and active area). If edges of video are not displayed correctly, use this mode to set the start position and active area automatically.

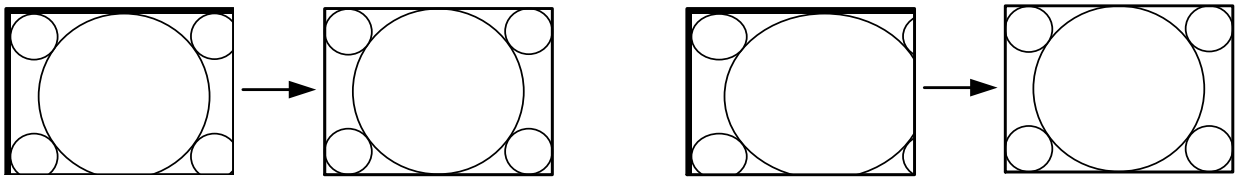

If the input video is not recognized correctly like above, it can adjust by executing "NORMAL MODE" automatic input measurement.

If the setting of active area is not correct and it cannot adjust only by starting position, the active area is also adjusted by executing automatic input measurement.

[Figure 9.14] Automatic measurement by "NORMAL MODE"

If the total number of horizontal dots is not correct, the aspect ratio is not matched even though automatic measurement is set to perform with the "NORMAL MODE". In this case, select "NEXT ASPECT" (Auto measurement taking into account aspect ratio) for the measurement function. If the aspect ratio of the input signal is known, you can directly specify the aspect ratio to correctly perform the automatic measurement. If input signal is not registered in the MSD, use this function.

If automatic measurement execute only strating position changes it shows "NORMAL END", and if the active area is changed by "NORMAL MODE" or if you set aspect ratio from "NEXT ASPECT" or directly it shows resolution which is set.

```
[IN6 AUTO SETUP]
1024x 768 60.00Hz
```

If there is no input signal on the input channel it shows "NOT AVAILABLE NOW" on the front VFD screen.

Press the "MENU/SET" key to perform automatic measurement.

Note:
In case the aspect ratio does not match or video is displayed on the position far from the correct position, set the input timing in, **"9.6.2 The total number of horizontal dots"**, **"9.6.3 Start position"**, and **"9.6.4 Active area"**.

■ Operation from input channel selection key

You can execute the automatic measurement not only from this menu but also by pressing an input selection key for 2 seconds or longer. By pressing an input selection key for 2 seconds, the auto measurement mode with "NORMAL MODE" will be enabled. After that, pressing the same key for 3 seconds or longer, the auto measurement mode with "NEXT ASPECT" will be enabled. (This auto measurement mode can be enabled also by pressing the input key for 5 seconds or longer continuously.) Once you perform the function, from the next time, it can be performed simply by pressing the key without pressing it for several seconds. This mode can be canceled 5 seconds after the last auto measurement is executed.

Input channel selection key

・IN8 or IN9 key (if IN8 and IN9 are analog)

【See: 9.5.5 Selecting signal of DVI input connector】

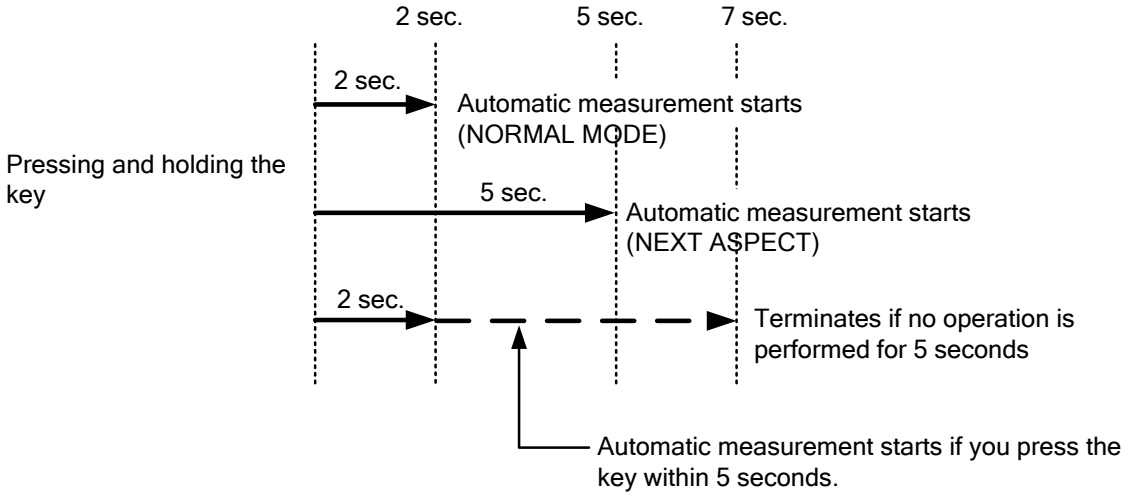

[Figure 9.15] Automatic measurement using input channel selection key

9.6.2 The total number of horizontal dots

Menu	Top → INPUT TIMING → H TOTAL DOTS
Setting for	Each input channel, each input signal (only analog input signal)
Setting value	400DOT to 4125DOT [Default] varies depending on the input signal.

You can set the total number of horizontal dots of analog RGB/analog YPbPr input video.
The settable values vary depending on the input signal. If interlace signal are input, the sampling clock (Holizontal shyncronized frequency x the total number of holizontal dots) must be within 13 MHz to 81 MHz.
If non-interlace signal are input, the sampling clock must be within 13 MHz to 162 MHz.

If other signal is input, the total number only can be displayed but not set.
If there is no input signal on the input channel it shows "NOT AVAILABLE NOW" on the front VFD screen.

9.6.3 Start position

Menu	Top → INPUT TIMING → H START (Horizontal) / V START (Vertical)
Setting for	Each input channel, each input signal
Setting value	**[Table 9.5] Setings of start position**

[Table 9.5] Setings of start position

Function	Setting value
Horizontal start position	64DOT to 2900DOT (The total number of horizontal dots－Horizontal active area or less)
Vertical start position	10LINE to 2048LINE (The total number of vertical lines－Vertical active area or less)

[Default] varies depending on the input signal.

You can set the horizontal/vertical starting position.

Setting value must be as follows. If the set value exceeds the value, the starting position will be set the limit value within the settable range automatically.

Horizontal : The total number of horizontal dots > Horizontal active area > Horizontal starting position
Vertical : The total number of vertical lines > Vertical active area > Vertical starting position

If there is no input signal on the input channel it shows "NOT AVAILABLE NOW" on the front VFD screen.

9.6.4 Active area

Menu Top → INPUT TIMING → H DISPLAY (Horizontal) / V DISPLAY (Vertical)
Setting for Each input channel, each input signal
Setting value [Table 7.26] Settings of active area

[Table 9.6] Settings of active area

Function	Setting value
Horizontal active area	64DOT to 2900DOT (The total number of horizontal dots－64 or less)
Vertical active area	10LINE to 2048LINE (The total number of vertical lines－10 or less)

[Default] varies depending on the input signal.

You can set the horizontal/vertical active area of input video.
The horizontal setting value must be [The total number of horizontal dots > Horizontal active area]. If the set value exceeds the limit value by changing the total number of horizontal dots, the horizontal active area will be set to the limit value within the set range automatically.

If there is no input signal on the input channel it shows "NOT AVAILABLE NOW" on the front VFD screen.

9.6.5 Automatic measurement of start position

Menu	Top → INPUT TIMING → AUTO START POS
Setting for	Each input channel, each input signal
Setting value	ALL OFF : not measuring all inputs from the input automatically
	OFF : not measuring the current input signal automatically
	ON : measuring the current input signal automatically [Default]

The MSD monitors continuously the upper left of analog input video signal and it automatically matches the upper left of the input video and the upper left of the screen.

Notes:

- For motion images, some content may not be displayed on the full screen, and the display position may be moved every time the setting of the automatic measurement is applied. In such a case, set this menu to "OFF". As "OFF" and "ON" are saved for each input signal, it can be set according to the input signal. If you do not want to perform this function for all resolution, select "ALL OFF".

- Only the start position is set by automatic measurement of this menu. If **"9.6.2 The total number of horizontal dots (P.69)"** and **"9.6.4 Active area (P.70)"** do not match, the lower right may be cut off or blackout may be output. In this case, adjust the whole screen by following **"9.6.3 Start position (P.69)"**. As the set value must not exceed the value set in **"9.6.3 Start position (P.69)"**, some input videos are displayed with blackout at the left or top side.

- This menu is valid only if "**[Figure 9.13] Conditions of automatic measurement**" is satisfactory.

- Even if you set this menu to "ON", the manual setting will be applied and the automatic measurement is not executed if you set any of the following menus: **"9.6.2 The total number of horizontal dots"**, **"9.6.3 Start position"**, and **"9.6.4 Active area"**. If you set **"9.6.9 Tracking",** the manual setting is applied, and tracing is not set automatically when the automatic measurement is executed. When you execute **"9.6.1 Automatic measurement"**, settings of this menu will be valid again.

9.6.6 Automatic setting of input timing

Menu	Top → INPUT TIMING → UNKNOWN TIMING
Setting for	None
Setting value	AUTO SETUP ON [Default], AUTO SETUP OFF

The MSD loads the optimal table from the built- in table and converts signal. However, if unregistered signal is input, the input timing must be set. By setting this menu to "AUTO SETUP ON", **"9.6.1 Automatic measurement"** is executed and the input timing is set automatically if signal that cannot be detected by the MSD are input for the first time.

Note:

If automatic measurement finds inconsistency of aspect ratio, please perform **"9.6.1 Automatic measurement"** manually or set the input timing in **"9.6.2 The total number of horizontal dots"**, **"9.6.3 Start position"** and/or **"9.6.4 Active area"**.

9.6.7 Loading device data

Menu	Top → INPUT TIMING → LOAD
Setting for	Each input channel, each input signal

Device data whose input timing is registered can be loaded according to the input signal.
The setting of this menu is not updated until the MENU/SET key is pressed. Make sure to press the MENU/SET key to update the setting.
If there is no input signal on the input channel it shows "NOT AVAILABLE NOW" on the front VFD screen.

[Table 9.7] Items to be loaded

Input signal	Item
Analog	Registered device data will be loaded. Use this menu in the following cases: • Several device data with the same frequency of synchronous signal and different input timings is registered. • You want to set the input timing again.
Digital	The value that is automatically detected by the MSD will be set. Use this menu to restore the input timing to the original value.

9.6.8 Registering device data

Menu	Top → INPUT TIMING → SAVE
Setting for	Each input channel, each input signal
Setting value	No. 1 to No.99

You can save up to 99 analog RBG/analog YPbPr input timing settings to the device data.
The device data can be named up to 14 charactors using ASCII code 20 to 7D. The device table name is optional. If a device table name is not registered and press MENU/SET key without device table name, the input resolution is registered as the device talble name automatically. If a device table name is already registered and press MENU/SET key without device table name, the input timing is saved to the device table name without changing the device table name.

From the next time, when the same signal is input to other channel, video will be displayed with the registered timing. The setting of this menu is not updated until the MENU/SET key is pressed. Make sure to press the MENU/SET key to update the setting.

If there is no input signal on the input channel it shows "NOT AVAILABLE NOW" on the front VFD screen.

9.6.9 Tracking

Menu	Top → INPUT TIMING → TRACKING
Setting for	Each input channel, each input signal
Setting value	0 to 63 [Default]: 0

You can adjust the tracking of analog RGB/analog YPbPr input video.
If there is no input signal on the input channel it shows "NOT AVAILABLE NOW" on the front VFD screen.

9.7 Output settings

9.7.1 Output mode

Menu	Top → OUTPUT SETTING → OUTPUT MODE
Setting for	Each output channel
Setting value	

- HDMI YCbCr 4:4:4 MODE [Default]
- HDMI YCbCr 4:2:2 MODE
- HDMI YCbCr 4:2:0 MODE
- HDMI RGB MODE
- DVI MODE

You can select an output signal mode and color space of the output video. The MSD outputs selected mode, however, if the connected sink device has optimal output mode and color space, the MSD outputs optimal output mode signal for the connected sink device. With "HDMI YCbCr 4:2:0 MODE", YCbCr 4:2:0 has priority if the signal is 4K@60 / 59.94 / 50, and with other resolutions, YCbCr 4:4:4 has priority.

Higher priority	HDMI YCbCr 4:4:4 MODE
↑	HDMI YCbCr 4:2:2 MODE
	HDMI YCbCr 4:2:0 MODE
↓	HDMI RGB MODE
Lower priority	DVI MODE

Note:
If "DVI MODE" is selected, the MSD can output DVI signal at 1080p, QWXGA, or lower resolution. For other resolutions, it outputs signal at the appropriate resolution of the connected sink device.

9.7.2 Synchronous signal output with no input video

Menu	Top → OUTPUT SETTING → SYNC OUTPUT
Setting for	Each output channel
Setting value	ON [Default], OFF

You can set whether synchronous signal is output when no video signal is input from the selected input, or when "OFF" is selected for the input. If you set this menu to "ON", you can prevent the sink device from being switched to the standby mode.

9.7.3 Output video with no input video

Menu	Top → OUTPUT SETTING → VIDEO OUTPUT
Setting for	Each output channel
Setting value	

- BLUE [default]
- BACKGROUND COLOR
- BLACK

You can set the color of the video to be output when no video signal is input from the selected input. The setting will be valid when **"9.7.2 Synchronous signal output with no input video"** is set to "ON".

9.7.4 Window transaction effect

Menu	Top → OUTPUT SETTING → VIDEO SWITCHING
Setting for	Each output channel
Setting value	

- FREEZE→FADE OUT-IN [Default]
- FADE OUT-IN
- CUT
- BOTTOM→TOP WIPE
- TOP→BOTTOM WIPE
- RIGHT→LEFT WIPE
- LEFT→RIGHT WIPE

You can select a window transition effect for when the video inputs is switched.
The setting will be valid also when **"9.5.4 Automatic detection of input video intertuption"** is set to "ON"

9.7.5 Window transaction speed

Menu	Top → OUTPUT SETTING → SWITCHING SPEED
Setting for	Each output channel
Setting value	100ms to 2000ms (per 10 ms.) [Default]: 350 ms.

You can set the window transition speed for FADE OUT/IN or WIPE OUT/IN when the input channel is switched.
The setting will be valid also when **"9.5.4 Automatic detection of input video intertuption"** is set to "ON"

9.7.6 Wipe color

Menu	Top → OUTPUT SETTING → WIPE COLOR
Setting for	Each output channel
Setting value	R / G / B: 0 to 255 [Default]: R / G / B: 0 (black)

You can set the wipe color while switching video input when the input channel is switched.
If you set "LINK" to "ON", you can set only Red (R). Settings of Green (G) and Blue (B) will also be changed according to the settings of the Red (R).

9.7.7 HDCP

Menu	Top → OUTPUT SETTING → HDCP OUTPUT MODE
Setting for	Each input channel
Setting value	
	HDCP 2.2 : Encrypts HDCP via HDCP 2.2 [Default]
	HDCP 1.4 : Encrypts HDCP via HDCP 1.4
	HDCP INPUT ONLY : Encrypts HDPC only if input signal has HDCP
	DISABLE : Do not encrypt HDCP

You can set the HDCP output for when a sink device supporting HDCP is connected.
Normally set this menu to "HDCP 2.2". The MSD encrypts optimal HDCP which HDCP 2.2 has priority.

If you select "HDCP 1.4", the MSD encrypts HDCP via HDCP 1.4 regardless which HDCP version the sink devices have.

If you select "HDCP INPUT ONLY", the MSD encrypts HDCP only if the input signal has HDCP. However, if input channel is changed to others and HDCP authentication status is changed, the MSD starts HDCP authentication again. This action may take time to output video and audio.

If you select "DISABLE", the MSD never encrypts HDCP. Only the input signal which does not have HDCP can be output.

If the sink device which does not support HDCP is connected, the MSD can output only the video and audio which do not have HDCP regardless this menu.

Notes:
- HDCP2.2 (stream type 0) contents can be displayed on sink devices supporting HDCP1.4.
- HDCP2.2 (stream type 1) contents can be displayed on sink devices supporting HDCP2.2 but cannot be displayed on sink devices supporting HDCP1.4.

9.7.8 The number of HDCP retries

Menu	Top → OUTPUT SETTING → HDCP ERROR RETRY
Setting for	Each output channel
Setting value	ETERNITY : retry until succeeded [Default],
	0 to 100 : 0 to 100 times

You can set the number of HDCP retries.
If a sink device with HDCP is connected and you set **"9.7.7 HDCP"** to "HDCP 2.2", "HDCP 1.4", or "HDCP INPUT ONLY", HDCP is authorized regardless of the status of input signal. Normally, set this menu to "ETERNITY" to retry the authentication automatically after the first authentication fails. However, you can set the number of retries manually. (If retry is not succeeded even after the MSD retries for the set number of retry times, video and audio with HDCP are not output.)
The setting of this menu is not updated until the MENU/SET key is pressed. Make sure to press the MENU/SET key to update the setting.

9.7.9 Deep Color

Menu	Top → OUTPUT SETTING → DEEP COLOR OUTPUT
Setting for	Each output channel
Setting value	24-BIT COLOR [Default], 30-BIT COLOR

You can select the color depth of HDMI signal.
"30-BIT COLOR": signal is output with "30-BIT COLOR" only if a sink device supporting Deep Color is connected. If a sink device that does not support Deep Color is connected, signal is output with "24-BIT COLOR" automatically. However, since the transmission clock of "30-BIT COLOR" is faster than that of "24-BIT COLOR", noise may occur if a bad-quality cable or long cable is connected. In those cases, the noise may be removed by selecting"24-BIT COLOR".
When the MSD outputs at WQHD (2560 x 1440) / WQXGA (2560x1600) / 4K (3840 x 2160) / 4K (4096 x 2160), the color depth is "24-BIT COLOR".

9.7.10 CEC connection

Menu	Top → OUTPUT SETTING → CEC CONNECTION
Setting for	Each output channel
Setting value	・NOT CONNECTED [Default] ・SELECTED CHANNEL ・IN1 to IN7

You can set which I/O to be connected when a device supporting CEC is connected.
The setting of this menu is not updated until the MENU/SET key is pressed. Make sure to press the MENU/SET key to update the setting.

Notes:

- Using CEC may cause negative effects. If you do not use CEC, set this menu to "NOT CONNECTED". If the status of the sink devices connected to the HDMI output connector changes (such as being turned OFF→ ON) or if the CEC connection changes, the EDID may also need to be changed (the MSD changes it automatically) in order to update the address of the connected device. When the EDID is changed, the source device stops outputting video temporarily. Note the following points to not make the EDID change at the time of operation.
- IN8 and IN9: CEC is not supported.
- CEC connection is a one-on-one basis; it cannot connect multiple inputs and outputs. If you set multiple outputs to connect to the same input, only a smaller output number is connected preferentially and other outputs are not connected.

9.7.11 HDCP re-authentication

Menu	Top → OUTPUT SETTING → HDCP AUTHENTICATION
Setting for	Each output channel

If a sink device supporting HDCP is connected, HDCP is authorized automatically. You can re-authorize HDCP manually using this menu (connection Reset is performed automatically, but it can be performed manually using this menu). Press the MENU/SET key to perform the re-authentication.

9.7.12 Priority of input channel automatic switching

Menu	Top → OUTPUT SETTING → AUTO SWITCHING ON / AUTO SWITCHING OFF
Setting for	Each output channel
Setting value	[Table 9.8] Setting of priority of input channel automatic switching

[Table 9.8] Setting of priority of input channel automatic switching

Item	Set value	Default
Output channel (OUT)	1 to 4	-*
Input channel (IN)	1 to 9	-*
Priority (PRI)	1 (high) to 9 (low), OFF	OFF

*Setting each input channel priority to each output channel

■ AUTO SWITCHING ON

AUTO SWITCHING ON menu switches input signal when the input signal changes from "OFF" to "ON". The MSD switches input signal automatically based on following conditions:

・When the input signal become from "OFF" to "ON", and that input channel has higher priority that current channel or same priority level.

・When the input signal become from "OFF" to "ON", and other input channels, that have higher priority than the input signal, do not have input signal.

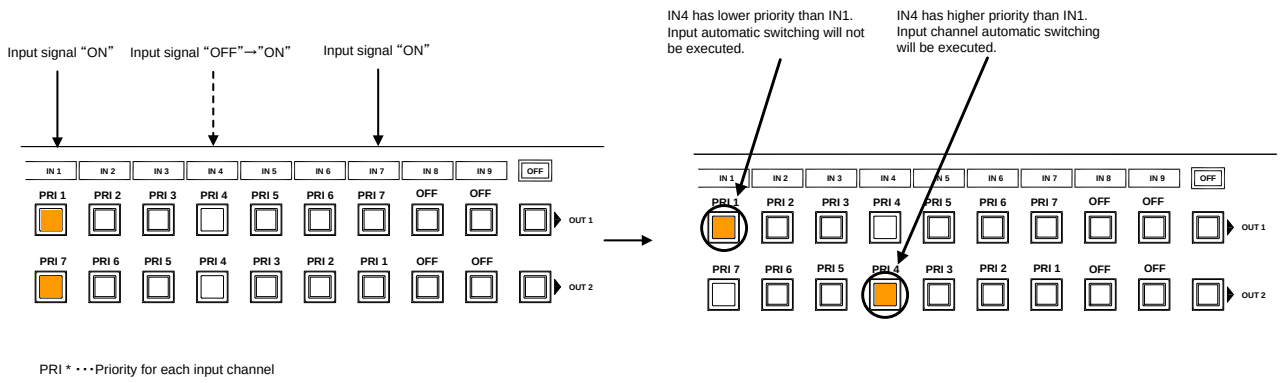

[Figure 9.16] Input channel automaic switching "OFF" to "ON"

■ AUTO SWITCHING OFF

AUTO SWITCHING OFF menu switches input signal when the input signal changes from "ON" to "OFF".
The MSD switches input signal automatically based on following conditions;

・Switches to the input channel having input signal and highest priority.

・If some channels have the same priority, the MSD switches to the lower input channel having input signal.

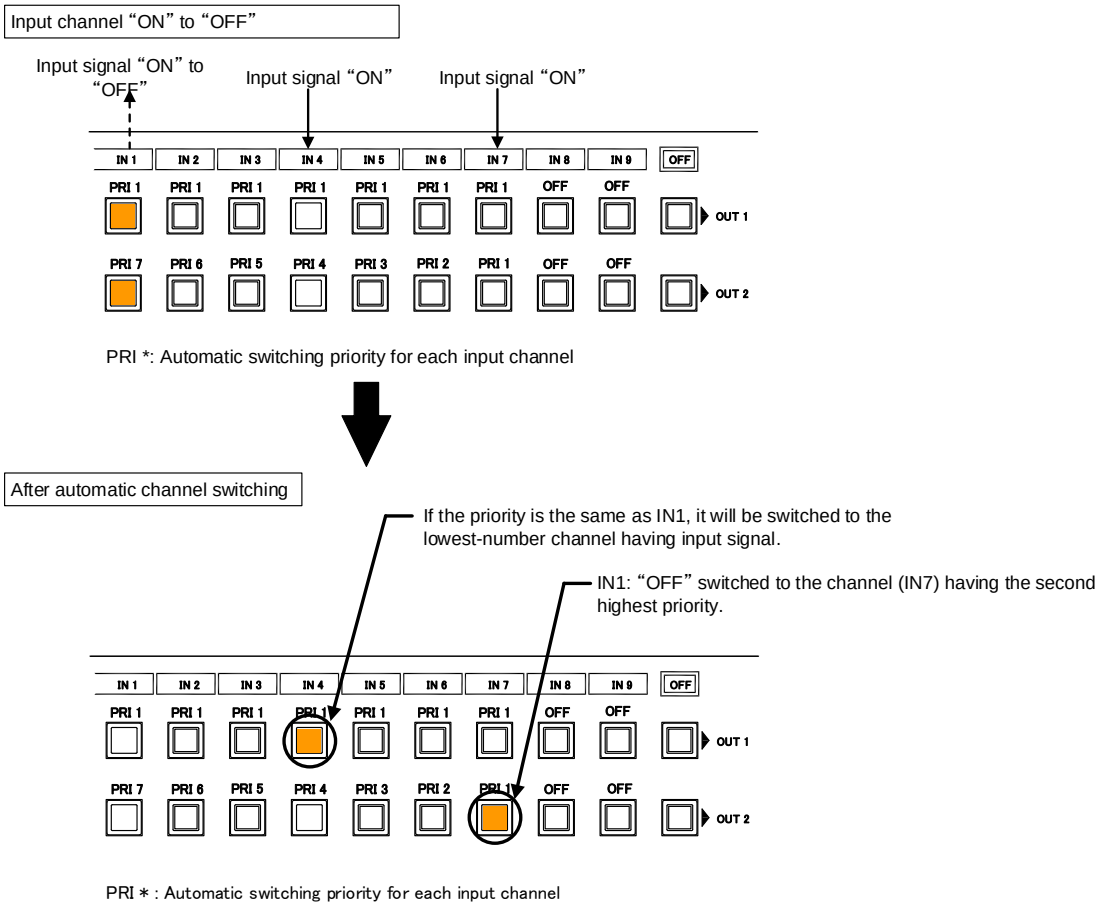

[Figure 9.17] Input channel automaic switching "ON" to "OFF"

If the priority setting of the input channel is "OFF", input channel automatic switching is not executed.
You can set channel switching mode for input channel automatic switching from "**9.7.14 Channel switching mode**".

Make sure to press the "MENU/SET" key to apply the settings; otherwise, they are not changed.

9.7.13 Masking time after automatic switching of input channel

Menu	Top → OUTPUT SETTING → AUTO SWITCHING MASK
Setting for	Each output channel
Setting value	0s000ms to 999s999ms [Default: 0s000 ms]

You can set the time from when input channel is switched automatically until when the next automatic switching is performed. The automatic switching is not performed during the set time.

【See: 9.7.12 Priority of input channel automatic switching】

9.7.14 Channel switching mode of automatic switching

Menu	Top → INPUT SETTING → AUTO SWITCHING MODE
Setting for	Each output channel
Setting value	V&A (Video & Audio) [Default], VIDEO (Video), AUDIO (Audio)

You can set the channel switching mode when automatic switching is executed for when the input channel is switched automatically. This setting has priority regardless of setting of **"8.2 Selecting input channels"**.

【See: 9.7.12 Priority of input channel automatic switching】

9.8 Audio settings

HDMI digital audio supports the following formats. Set audio depending on device connected to the HDMI output connector.
Only "2 channel linear PCM" can be input by Factory default. If you want to use "Multi channel linear PCM" or bit stream signal (compressed audio), set "Audio format" and "Speaker configuration".

【See: 9.9.5 Audio format】
【See: 9.9.6 Speaker configuration】

[Table 9.9] Audio format

Audio format	Description
2 channel linear PCM	2ch, 32 kHz to 192 kHz,16 / 20 / 24 bit
Multi channel linear PCM	8ch, 32 kHz to 192 kHz,16 / 20 / 24 bit
AC-3, Dolby Digital, DTS, Dolby Digital+, DTS-HD, Dolby TrueHD, AAC	Bitstream

■ If multi channel linear PCM signal input to digial audio:

If Multi channel linear PCM signal are input to digital audio, two channels set in "**9.8.8 Multi channel audio output"** or down-mixed audio is output to analog audio and sink devices that do not support multi linear PCM.

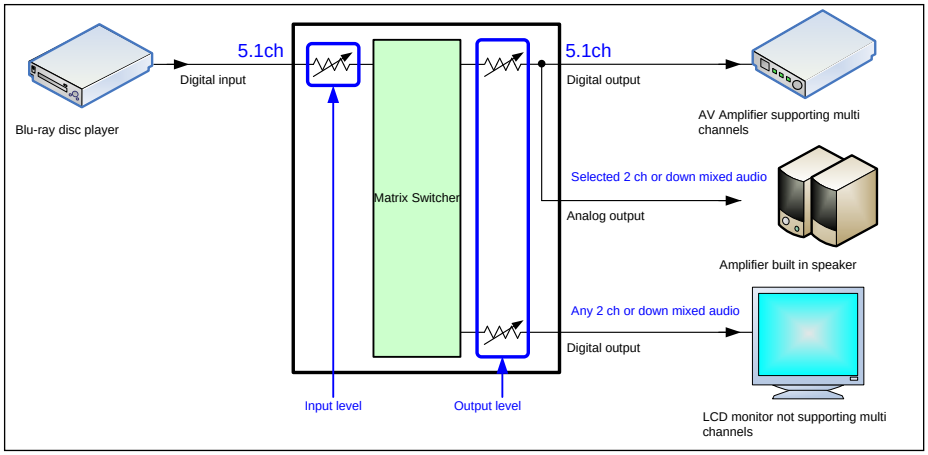

[Figure 9.18] Multi channel linear PCM input

■ If bitstream signal input to digital audio:

If bitstream signal (compressed audio) such as Dolby Digital is input to HDMI digital audio, these input audio signal is output to digital audio as they are. They are not output to analog audio, and audio volume cannot be adjusted.

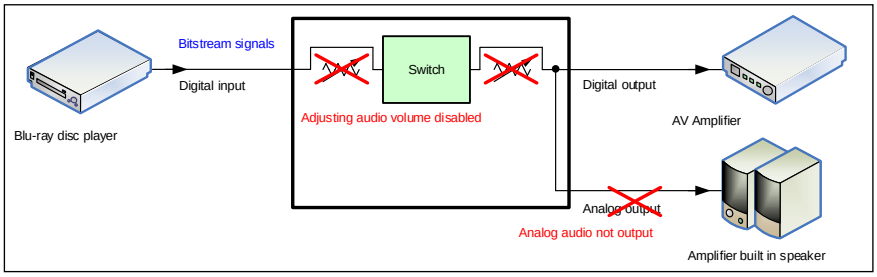

[Figure 9.19] Bitstream signal input

9.8.1 Output level

Menu	Top → AUDIO → OUTPUT LEVEL
Setting for	Each output channel
Setting value	-60dB to +10dB [Default] ±0dB

You can set the audio output level.
If you change the output level while audio output mute is set to "ON", mute is canceled.
If you set top display of front VFD screen to audio volume adjustment from **"9.16.7 Top VFD"**, you can change and set audio output level from top display.

9.8.2 Output mute

Menu	Top → AUDIO → OUTPUT MUTE
Setting for	Each output channel
Setting value	OFF [Default], ON

You can enable or disable the audio output mute.
If you set top display of front VFD screen to audio volume adjustment from **"9.16.7 Top VFD"**, you can change and set mute ON/OFF from top display.

9.8.3 Input selection

Menu	Top → AUDIO → AUDIO INPUT SELECT
Setting for	Each input channel (only digital input)
Setting value	AUTO [Default], ANALOG, DIGITAL

You can select digital or analog audio input to be output.
If you select "AUTO," digital audio is output automatically when HDMI signal with audio signal is input; analog audio is output in other cases.
If you select "AUTO" while both digital and analog audio signal are input, the digital audio is output. While no HDMI signal is input (for example, during a standby period until the source device starts or output resolution of the output device is changed), the analog audio is output. If you do not want to output analog audio in these conditions, set the audio input "DIGITAL" manually.

9.8.4 Input level

Menu	Top → AUDIO → INPUT OFFSET
Setting for	Each input channel, each input signal
Setting value	-60dB to ±0dB [Default]: ±0dB

You can correct the gap in audio input levels of each input signal, because audio input level can be set for each input connector.

9.8.5 Lip sync

Menu	Top → AUDIO → OUTPUT LIP SYNC (Output side) / INPUT LIP SYNC (Input side)
Setting for	Output side : Each output channel Input side : Each input channel, each input signal
Setting value	0FRAME to 8FRAME [Default]: 0FRAME

You can adjust the gap between video (motion) and audio (sound).
Up to eight frames can be set for each input/output channel.
If sampling frequency is 192 kHz and vertical synchronous frequency is 24 Hz / 25 Hz / 30 Hz, the total maximum value of lip sync input / output channel.

[Table 9.10] Lip sync maximum value

Sampling frequency	Vertical synchronous frequency	Lip sync maximum value
192 kHz	24 Hz	Up to 8 frames*
	25 Hz	Up to 8 frames*
	30 Hz	Up to 10 frames*
Other conditions		Up to 16 frames

*Up to 8 frames can be set for input / output channel lip sinc, but lip sync is limited to the maximum value.

9.8.6 Sampling frequency

Menu	Top → AUDIO → SAMPLING FREQUENCY
Setting for	Each output channel
Setting value	・AUTO [Default] ・96kHz ・48kHz ・32kHz ・192kHz ・88.2kHz ・44.1kHz

You can set the sampling frequency of digital audio output.

■If you select "AUTO":
Outputs digital audio with the maximum sampling frequency supported by the connected sink device to HDMI output connector. At this time, the sampling frequency that is actually output is displayed in parentheses. In case EDID cannot be read from the sink device, the sampling frequency that was used the last time is selected with "*" on its right side.

[Figure 9.20] Left: maximum sampling frequency; right: sampling frequency used last time

9.8.7 Audio output connector

Menu Top → AUDIO → OUTPUT CONNECTOR
Setting for Each output channel
Setting value [Table 9.11] Settings of audio output control

[Table 9.11] Settings of audio output control

Setting value	Analog audio output connector	HDMI output connector
ANALOG&DIGITAL [Default]	Can be output	Partly*
ANALOG	Can be output	Cannot be output
DIGITAL	Cannot be output	Partly*

*If "DVI MODE" is selected for **"9.7.1 Output mode"**, audio is not output to the HDMI output connector regardress of the setting of this menu.

You can set audio output signal from audio output connector and HDMI output connector.

9.8.8 Multi channel audio output

Menu Top → AUDIO → MULTI AUDIO
Setting for Each output channel
Setting value

- DOWN MIX [Default]
- CH1/CH2 STEREO
- CH3/CH4 STEREO
- CH5/CH6 STEREO
- CH7/CH8 STEREO
- CH1/CH2 MONO
- CH3/CH4 MONO
- CH5/CH6 MONO
- CH7/CH8 MONO

You can select audio to be output to a sink device that does not support multi-channel linear PCM or analog audio for when multi-channel linear PCM audio is input from an HDMI input connector.
You can select audio from "DOWN MIX" (multi-channel audio is downmixed), "STEREO" (stereo audio), or "MONO" (monaural audio).

9.8.9 Test tone

Menu	Top → AUDIO → TEST TONE
Setting for	Each output channel
Setting value	

Test tone:

OFF [Default],1kHz ,400Hz

Speaker:

- ALL [Default]
- FRONT L/R
- REAR L/R
- REAR L/R CENTER
- FRONT LEFT
- FRONT RIGHT
- LOW FREQUENCY EFFECT
- FRONT CENTER
- REAR LEFT
- REAR RIGHT
- REAR LEFT CENTER
- REAR RIGHT CENTER

Since test tone can be output only to specific speakers, you can check the position of the speakers.
For "LOW FREQUENCY EFFECT", only test tone of 30 Hz is output.

【See: 9.9.6 Speaker configuration】

9.9 EDID (Extended Display Identification Data)

You can set or customize EDID to be sent to the source device. Change the setting as needed.

■ **Setting EDID**

(1) If you use copied EDID, copy the target EDID from the sink device.
(2) Set the EDID that will be sent to the source device.
(3) If you use built-in EDID, customize the data as usage.

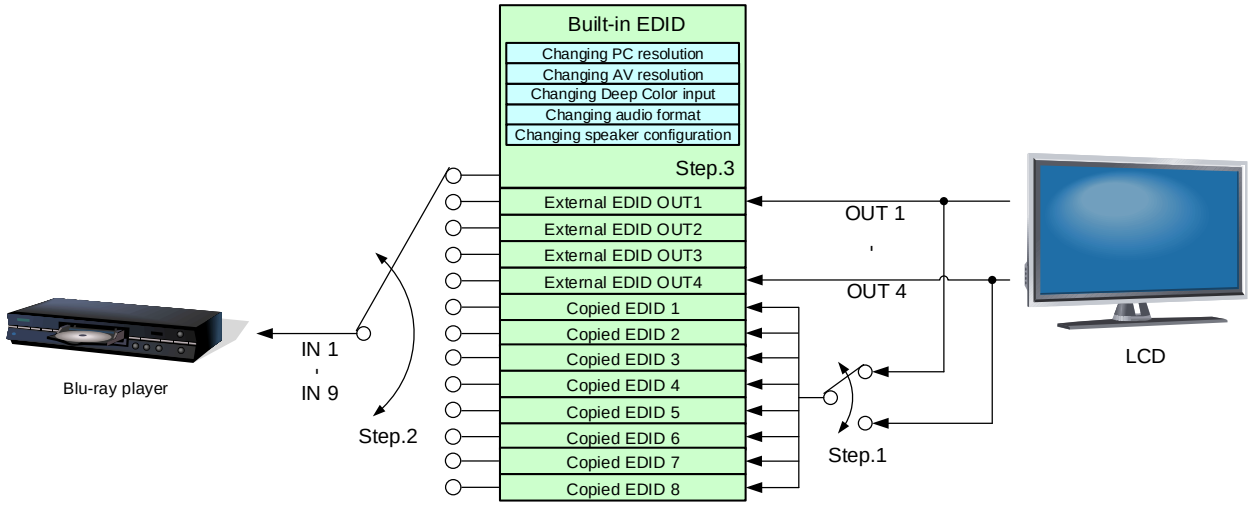

[Figure 9.21] Setting EDID (Ex: MSD-7204UHD)

9.9.1 EDID

Menu	Top → EDID → EDID DATA
Setting for	Each input channel (only digital input signal)
Setting value	

- INTERNAL EDID [Default]
- OUT1 MONITOR
- OUT2 MONITOR
- OUT3 MONITOR
- OUT4 MONITOR
- COPY DATA1 to COPY DATA8

You can set the EDID to be sent to the source device from built-in EDID ("INTERNAL EDID"), connected sink device's EDID ("MONITOR") and copied EDID ("COPY DATA").
EDID copied from a sink device will be displayed if any.
The setting of this menu is not updated until the MENU/SET key is pressed. Make sure to press the MENU/SET key to update the setting.

【See: 9.9.7 Copying EDID】

9.9.2 Resolution for PCs

Menu	Top → EDID → PC RESOLUTION
Setting for	Each input channel
Setting value	

- SVGA (800x600)
- XGA (1024x768)
- 720p (1280x720)
- WXGA (1280x768)
- WXGA (1280x800)
- Quad-VGA (1280x960)
- SXGA (1280x1024)
- WXGA (1360x768)
- WXGA (1366x768)
- SXGA+ (1400x1050)
- WXGA+ (1440x900)
- WXGA++ (1600x900)
- UXGA (1600x1200)
- WSXGA+ (1680x1050)
- 1080i (1920x1080)
- 1080p (1920x1080)
- WUXGA(1920x1200)
- QWXGA(2048x1152)
- WQHD(2560x1440)*1
- WQXGA(2560x1600)*1
- 2160p@30 (3840x2160)*1
- 2160p@60 (3840x2160)*2

[Default] IN1 to IN3: 2160p@60 (3840x2160)
IN4 to IN9: 1080p(1920x1080)

*1 IN1 to IN7
*2 IN1 to IN3

You can set the resolution requested to be output from source devices.
This setting will also be applied for controlling output resolution when AV devices (such as Blu-ray players) are connected via HDMI. For digital input, this setting will be valid only if "INTERNAL EDID" is selected for "**9.9.1 EDID".**
The setting of this menu is not updated until the MENU/SET key is pressed. Make sure to press the MENU/SET key to update the setting.

Timing of 720p, 1080i, 1080p, and 2160p is the same as that of HD signal meeting the CEA-861D standard. For other resolutions, timings meet the VESA DMT or VESA CVT standards.
Set the maximum available resolution for EDID, but the lower resolutions are also supported. Select the resolution supported by the connected PC.

You can select 2160p (4096x2160) resolution from "**9.9.3 Input resolution for AV devices"**.

If a source device that does not support 4K is connected to the input connector with 4K EDID settings, the source device may output DVI signal meaning audio is not output. In order to output HDMI signal from the source device, change the settings of this menu and **"9.9.3 Input resolution for AV devices"** to a value other than 4K.

[Table 9.12] Supported resolution

Input resolution settings \ Supported resolution	640×480	800×600	1024×768	1280×720	1280×768	1280×800	1280×960	1280×1024	1360×768	1366×768	1400×1050	1440×900	1600×900	1600×1200	1680×1050	1920×1080i	1920×1080p	1920×1200	2048×1152	2560 x 1440	2560 x 1600	2160p (30p)	2160p (60p)
800x600	Y	Y	N	N	N	N	N	N	N	N	N	N	N	N	N	N	N	N	N	N	N	N	N
1024x768	Y	Y	Y	N	N	N	N	N	N	N	N	N	N	N	N	N	N	N	N	N	N	N	N
1280x720[D4]	Y	Y	Y	Y	N	N	N	N	N	N	N	N	N	N	N	N	N	N	N	N	N	N	N
1280x768	Y	Y	Y	Y	Y	N	N	N	N	N	N	N	N	N	N	N	N	N	N	N	N	N	N
1280x800	Y	Y	Y	Y	Y	Y	N	N	N	N	N	N	N	N	N	N	N	N	N	N	N	N	N
1280x960	Y	Y	Y	Y	Y	Y	Y	N	N	N	N	N	N	N	N	N	N	N	N	N	N	N	N
1280x1024	Y	Y	Y	Y	Y	Y	Y	Y	N	N	N	N	N	N	N	N	N	N	N	N	N	N	N
1360x768	Y	Y	Y	Y	Y	Y	Y	Y	Y	N	N	N	N	N	N	N	N	N	N	N	N	N	N
1366x768	Y	Y	Y	Y	Y	Y	Y	Y	N	Y	N	N	N	N	N	N	N	N	N	N	N	N	N
1400x1050	Y	Y	Y	Y	N	Y	Y	Y	N	Y	Y	N	N	N	N	N	N	N	N	N	N	N	N
1440x900	Y	Y	Y	Y	N	Y	Y	Y	N	Y	Y	Y	N	N	N	N	N	N	N	N	N	N	N
1600x900	Y	Y	Y	Y	N	Y	Y	Y	N	Y	Y	Y	Y	N	N	N	N	N	N	N	N	N	N
1600x1200	Y	Y	Y	Y	N	Y	Y	Y	N	Y	Y	Y	Y	Y	N	N	N	N	N	N	N	N	N
1680x1050	Y	Y	Y	Y	N	Y	Y	Y	N	Y	Y	Y	Y	Y	Y	N	N	N	N	N	N	N	N
1920x1080i[D3]	Y	Y	Y	Y	N	N	N	N	N	N	N	N	N	N	N	Y	N	N	N	N	N	N	N
1920x1080p[D5]	Y	Y	Y	Y	N	N	Y	Y	N	Y	Y	Y	Y	Y	Y	N	Y	N	N	N	N	N	N
1920x1200	Y	Y	Y	N	N	Y	Y	Y	N	N	Y	Y	Y	Y	Y	N	Y	Y	N	N	N	N	N
2048x1152	Y	Y	Y	N	N	N	Y	Y	N	N	Y	Y	Y	Y	Y	N	Y	Y	Y	N	N	N	N
2560x1440	Y	Y	Y	N	N	N	Y	Y	N	N	Y	Y	Y	Y	Y	N	Y	N	Y	Y	N	N	N
2560x1600	Y	Y	Y	N	N	N	N	Y	N	N	Y	Y	Y	Y	Y	N	Y	N	Y	Y	Y	N	N
2160p (30p)	Y	Y	Y	N	N	N	N	Y	N	N	Y	Y	Y	Y	Y	N	Y	N	Y	N	Y	Y	N
2160p (60p)	Y	Y	Y	N	N	N	N	Y	N	N	Y	Y	Y	Y	Y	N	Y	N	Y	N	N	Y	Y

Y: Supported N: Not supported

9.9.3 Input resolution for AV devices

Menu	Top → EDID → AV RESOLUTION
Setting for	Each input channel (only digital input signal)
Setting value	

- AUTO [Default]
- UNUSED
- 480p
- 720p
- 1080i
- 1080p
- 2160p@30*1
- 2160p@60 4:2:0*2
- 2160p@60 4:4:4*2
- 4096x2160@30*1
- 4096x2160@60 4:2:0*2
- 4096x2160@60 4:4:4*2

*1 IN1 to IN7
*2 IN1 to IN3

You can set the resolution requested to be output from AV devices (such as Blu-ray players).
This setting will be valid if "INTERNAL EDID" is selected for **"9.9.1 EDID".**
Normally, set this menu to "AUTO" to set resolution for AV devices according to **"9.9.2 Resolution for PCs"** automatically.

"UNUSED" disables the EDID for AV devices. If you select "AUTO" and the resolution output from the PC is different from the resolution set in Properties, the problem may be solved by selecting "UNUSED".

If there is a potential to connect both PCs and AV devices with different resolutions (for example, PC with WXGA (1366x768), Blu-ray disc player with 1080p), set the PC resolution in "**9.9.2 Resolution for PCs**" and select the AV resolution in this menu. However, some PCs and AV devices may select the higher resolution of the resolutions set in "**9.9.2 Resolution for PCs"** or this menu.

If a source device that does not support 4K is connected to the input connector with 4K EDID settings, the source device may output DVI signal meaning audio is not output. In order to output HDMI signal from the source device, change the settings of this menu and **"9.9.3 Input resolution for AV devices"** to a value other than 4K.

The setting of this menu is not updated until the MENU/SET key is pressed. Make sure to press the MENU/SET key to update the setting.

[Table 9.13] Input resolutions when "AUTO" is selected

PC Resolution	640×480	800×600	1024×768	1280×720	1280×768	1280×800	1280×960	1280×1024	1360×768	1366×768	1400×1050	1440×900	1600×900	1600×1200	1680×1050	1920×1080i	1920×1080p	1920×1200	2048×1152	2560 x 1440	2560 x 1600	2160@30	2160@60 4:4:4
AV Resolution	480p			720p												1080i	1080p					2160p@30	2160p@60

Note:
If you select "UNUSED", the settings of **"9.9.4 Deep Color"**, **"9.9.5Audio format"**, and **"9.9.6 Speaker configuration"** will be disabled and audio is not output because the source device outputs signal through DVI mode.

9.9.4 Deep Color

Menu	Top → EDID → DEEP COLOR INPUT
Setting for	Each input channel (Digital input only)
Setting value	24-BIT COLOR [Default], 30-BIT COLOR

You can set the color depth to be output from the source device.
This menu is valid only if you select "INTERNAL EDID" for "**9.9.1 EDID**" and you select a resolution other than "UNUSED" for "**9.9.3 Input resolution for AV devices**".

If you select "30-BIT COLOR", compared to "24-BIT COLOR", "30-BIT COLOR" is transmitted using a higher clock frequency, which may cause noise if a cable with a bad quality or a long cable is connected. In such a case, the noise may be removed by setting the color to "24-BIT COLOR".
The setting of this menu is not updated until the MENU/SET key is pressed. Make sure to press the MENU/SET key to update the setting.

9.9.5 Audio format

Menu	Top → EDID → AUDIO FORMAT
Setting for	Each input channel (only digital input signal)
Setting value	**[Table 9.14] Audio format**

[Table 9.14] Audio format

Audio format	ON / OFF	Maximum sampling frequency (kHz)
PCM	Cannot be set	32 / 44.1 / 48 / 88.2 / 96 / 176.4 / 192 (48)
Dolby Digital	Can be set (OFF)	ON: 32 / 44.1 / 48 (48)
AAC	Can be set (OFF)	ON: 32 / 44.1 / 48 / 88.2 / 96 (48)
Dolby Digital+	Can be set (OFF)	ON: 32 / 44.1 / 48 (48)
DTS	Can be set (OFF)	ON: 32 / 44.1 / 48 / 96 (48)
DTS-HD	Can be set (OFF)	ON: 44.1 / 48 / 88.2 / 96 / 176.4 / 192 (192)
Dolby TrueHD	Can be set (OFF)	ON: 44.1 / 48 / 88.2 / 96 / 176.4 / 192 (96)

Default values are shown in parentheses.

You can set the audio format and maximum sampling frequency to be output from a source device.
This menu will be valid only if you select "INTERNAL EDID" for "**9.9.1 EDID**" and you select a resolution other than "UNUSED" for "**9.9.3 Input resolution for AV devices**".
The setting of this menu is not updated until the MENU/SET key is pressed. Make sure to press the MENU/SET key to update the setting.

9.9.6 Speaker configuration

Menu	Top → EDID → SPEAKER
Setting for	Each input channel (only digital input signal)
Setting value	Setting mode : AUTO [Default], MANUAL
	Each speaker : ON, OFF
	The number of speakers: 1 to 8

[Table 9.15] Default speaker configuration

The number of speakers	FL/ FR	LFE	FC	RL/ RR	RC	FLC/ FRC	RLC/ RRC	FLW/ FRW	FLH/ FRH	TC	FCH
1	OFF	OFF	ON	OFF	OFF	OFF	OFF	OFF	OFF	OFF	OFF
2 [Default]	ON	OFF	OFF	OFF	OFF	OFF	OFF	OFF	OFF	OFF	OFF
3	ON	ON	OFF	OFF	OFF	OFF	OFF	OFF	OFF	OFF	OFF
4	ON	ON	ON	OFF	OFF	OFF	OFF	OFF	OFF	OFF	OFF
5	ON	ON	OFF	ON	OFF	OFF	OFF	OFF	OFF	OFF	OFF
6	ON	ON	ON	ON	OFF	OFF	OFF	OFF	OFF	OFF	OFF
7	ON	ON	ON	ON	ON	OFF	OFF	OFF	OFF	OFF	OFF
8	ON	ON	ON	ON	OFF	OFF	ON	OFF	OFF	OFF	OFF

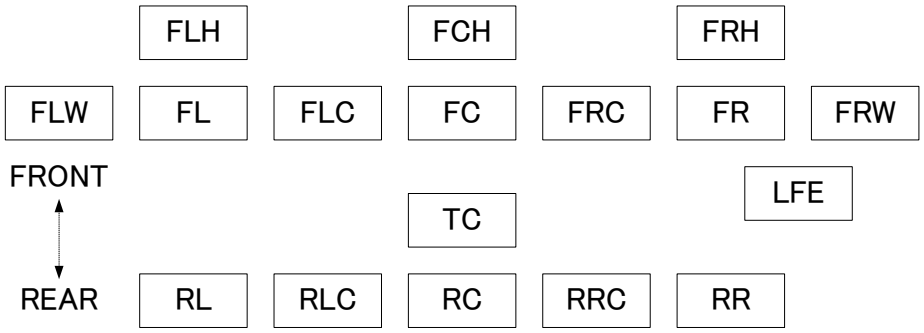

FL	Front Left	RRC	Rear Right Center
FC	Front Center	LFE	Low Frequency Effect
FR	Front Right	FLW	Front Left Wide
FLC	Front Left Center	FRW	Front Right Wide
FRC	Front Right Center	FLH	Front Left High
RL	Rear Left	FCH	Front Center High
RC	Rear Center	FRH	Front Right High
RR	Rear Right	TC	Top Center
RLC	Rear Left Center		

[Figure 9.22] Speaker configuration

You can set the speaker configuration of multi channel audio.
This menu is valid only if you select "INTERNAL EDID" for "**9.9.1 EDID**", you select a resolution other than "UNUSED" for "**9.9.3 Input resolution for AV devices**".
If you select "AUTO" for the setting mode and set the number of speakers, the speaker configuration will be set to the default setting that is shown in "**[Table 9.15] Default speaker configuration**".
To change the default configuration, set the mode to "MANUAL" and set each speaker to ON/OFF individually.
If the number of speakers exceeds the available value, the "DATA INVALID" message is displayed and the settings will not be applied.
The setting of this menu is not updated until the MENU/SET key is pressed. Make sure to press the MENU/SET key to update the setting.

9.9.7 Copying EDID

Menu	Top → EDID → MONITOR EDID COPY
Setting value	COPY EDID No.1 to 8

EDID of the sink device is loaded and registered to the MSD.
Up to eight EDID can be registered.

■ **Copying EDID (Ex: MSD-7204UHD)**

Step.1: Select output channel (OUT 1 to 4) which is connected to sink device
Step.2: Select the number of COPY EDID (No.1 to 8)
Step.3: Set the name of the EDID using ASCII code 20 to 7D (up to 10 characters)
Step.4: Press the "MENU/SET" key to register an EDID

Note:
The MSD does not support HDR. If EDID of a sink device supporting HDR is copied, the source device outputs HDR, the video may not be displayed correctly. In this case, disable HDR output in the source device side.

9.10 RS-232C

The RS-232C port of the MSD can output communication command control from PCs and can output control command to external devices from the MSD. The operation mode will be switched according to "**9.10.2 RS-232C operation mode**".

【See: 9.12 Setting control command】

9.10.1 RS-232C communication setting

Menu Top → COM PORT → PARAMETERS
Setting for Each RS-232C port
Setting value **[Table 9.16] RS-232C setting items**

[Table 9.16] RS-232C setting items

Setting item	Setting value	Default
Baud rate [bps]	4800, 9600, 19200, 38400	9600
Data bit length [bit]	8, 7	8
Parity check	NONE, EVEN, ODD	NONE
Stop bit [bit]	1, 2	1

You can set RS-232C communication.
The setting of this menu is not updated until the MENU/SET key is pressed. Make sure to press the MENU/SET key to update the setting.

9.10.2 RS-232C operation mode

Menu Top → COM PORT → FUNCTION
Setting for Each RS-232C port
Setting value RECEIVER [Default], TRANSMITTER

You can set the operation mode to "RECEIVER" mode in which the MSD is controlled externally or "TRANSMITTER" mode in which the MSD controls peripheral devices.
The setting of this menu is not updated until the MENU/SET key is pressed. Make sure to press the MENU/SET key to update the setting.

9.11 LAN

The LAN connector of the MSD can be used for outputting communication command control from PCs and for outputting control command to external devices from the MSD.

Operation mode will be switched according to the setting of "**9.11.2 LAN operation mode**". The MSD has eight connections that can be set individually.

【See: 9.12 Setting control command】

The MSD does not support automatic acquisition of IP address using DHCP (Dynamic Host Configuration Protocol). If you use the MSD in a network with DHCP, keep a fixed IP address. If controlling peripheral devices connected over LAN from the MSD, keep several fixed IP addresses.

9.11.1 IP address/Subnet mask/Gateway address

Menu	IP address: Top→LAN→IP ADDRESS Subnet mask: Top→LAN→SUBNET MASK Gateway address: Top→LAN→GATEWAY ADDRESS
Setting value	[Default]: IP address: 192.168.1.199 Subnet mask: 255.255.255.0 Gateway address: 192.168.1.200

You can set IP address, subnet mask, and gateway address.
The setting of this menu is not updated until the MENU/SET key is pressed. Make sure to press the MENU/SET key to update the setting.

9.11.2 LAN operation mode

Menu Top → LAN → FUNCTION
Setting for Each connection
Setting value **[Table 9.17] Setting items of LAN operation mode**

[Table 9.17] Setting items of LAN operation mode

Setting	Operation mode	
	Receiver mode	Transmitter
Operation mode	RECEIVER [Default]	TRANSMITTER
Destination IP address	Not necessary	0.0.0.0 to 255.255.255.255 [Default] 192.168.1.198
PJLink protocol connection	Not necessary	ON: Use OFF: Not use [Default]
Destination connection port number[*1]	Not necessary	1 to 65535 [Default]: 1100
PJLink protocol password[*2]	Not necessary	20, 30 to 39, 41 to 5A, 61 to 7A in ASCII code (in hex) [Default]: 20 (space)

[*1] If selecting "ON" for PJLink protocol, the target port number is fixed at "4352".
[*2] Up to 32 characters. If you do not want the password authentication, you do not need to set the item.

You can set the LAN operation mode consisting of "RECEIVER" mode that controls the MSD externally and "TRANSMITTER" mode that controls peripheral devices from the MSD.
If you select "TRANSMITTER" mode, you need to set the information of connecting device.
The setting of this menu is not updated until the MENU/SET key is pressed. Make sure to press the MENU/SET key to update the setting.

9.11.3 TCP port number

Menu Top → LAN → PORT NUMBER
Setting for Each connection
Setting value [Table 9.18] Settings of TCP port number

[Table 9.18] Settings of TCP port number

For	Setting value
Communication command control	23,1100,6000 to 6999
WEB browser control	80,5000 to 5999

[Default] Connections 1 to 3 = 1100; Connections 4 to 6 = 23;
Connections 7, 8 = 80

You can set the TCP port number to control the MSD externally.
This setting will valid if "RECEIVER" is selected for "**9.11.2 LAN operation mode**".
Each connection will be divided into connections for communication command control and WEB browser depending on the set port numbers.
The setting of this menu is not updated until the MENU/SET key is pressed. Make sure to press the MENU/SET key to update the setting.

9.11.4 MAC address

Menu Top → LAN → MAC ADDRESS

You can display the MAC address.

9.12 Setting control command

You can control external devices (for example, turning ON/OFF projectors) via RS-232C, LAN, contact closure, or CEC. You can register up to 32 commands in the MSD. Registered control commands will be associated with control command execution keys (COMMAND A to COMMAND I) or execution conditions such as switching video or audio.
When execution conditions are met, those commands will be performed in the order. The loop back function allows you to control the MSD itself.

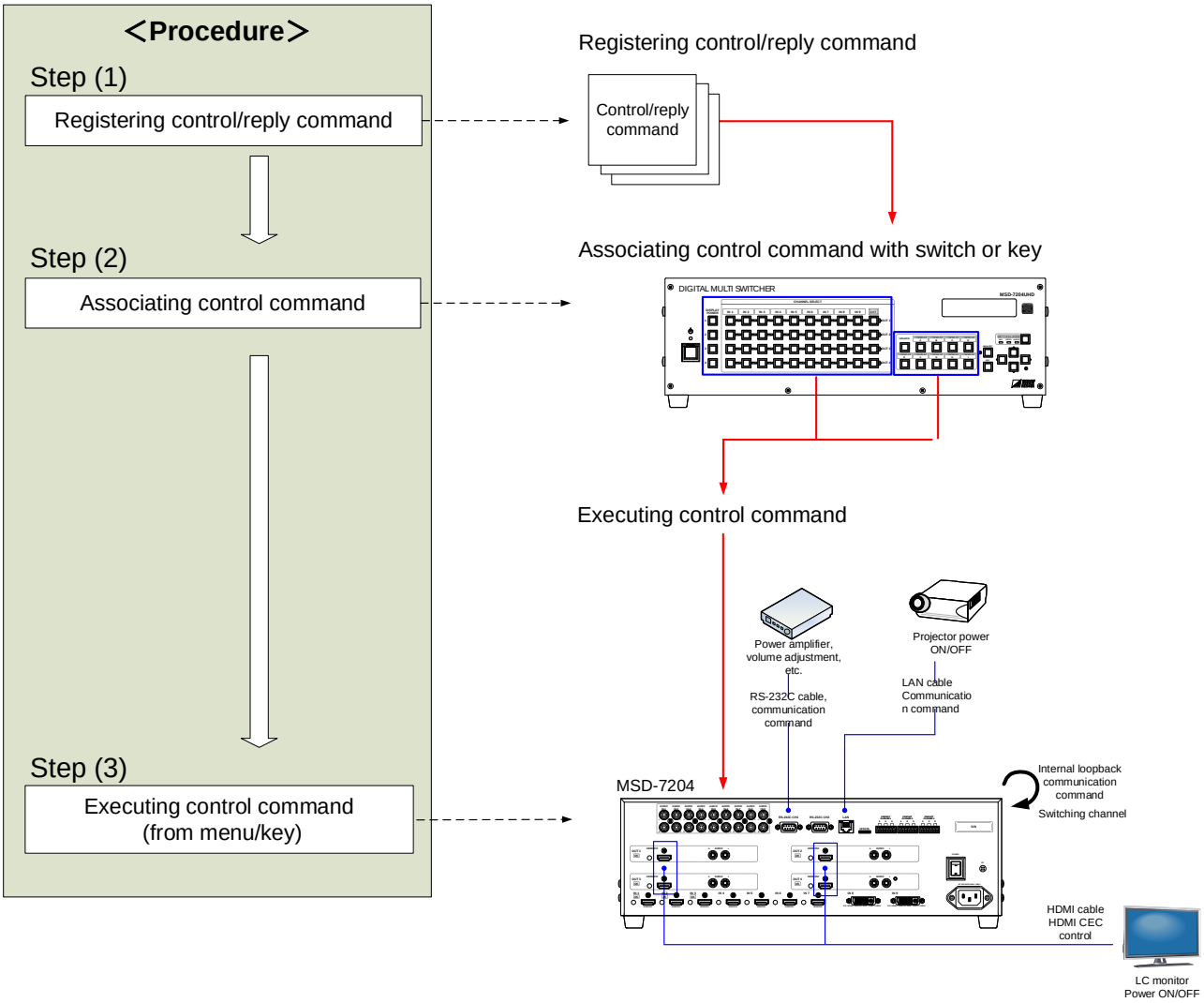

[Figure 9.23] Executing control command

Note:

You can recognize control command key's status (COMMAND A to COMMAND I) from the LED status of unlock key (UNLOCK), and the functions vary by the LED status of the unlock key.

Unlock key is "ON": The MSD executes registered control cmmands.
Unlock key is "Blinking": The MSD loads registered preset memory.
Unlock key is "OFF": The MSD locks control command execution keys.

■ Control command via RS-232C / LAN communication

Control commands can be sent from RS-232C port/LAN connector of the MSD.
Before executing control command, set the operation mode of the connector to "TRANSMITTER".

【See: 9.10.2 RS-232C operation mode】
【See: 9.11.2 LAN operation mode】

■ Screen display during control command execution

When a control command is executed, the user setting for the text of "MEMO" is displayed (1), and if the reply command is received, the "MEMO" text registered for the reply command is also displayed (2) for one second (when the control command that is used for checking the reply command is executed).
The received data is displayed (3) for two seconds (when the control command that is used for displaying the received data is executed).

Examples:
(1) "SCREEN UP" is registered in MEMO and the control command is executed.
(2) A reply command, "SCREEN OK", is displayed.
(3) "PROJECTOR LAMP" is registered in the MEMO and "%1LAMP=1000 1↵" is received.
(4) Reply command could not be received and retry over occurs.

(1) Only control command

```
SEND:SCREEN UP
```

(2) Control command (upper)
Reply command (lower)

```
SEND:SCREEN UP
RECV:SCREEN OK
```

(3) Received data is displayed.

```
SEND:PROJECTOR LAMP
RECV:%1LAMP=1000 1↵
```

(4) Reply command cannot be received and a retry error occurs.

```
SEND:SCREEN UP
RETRY OVER ERROR
```

[Figure 9.24] Screen display

If you configure several control commands, or if you display data received from several com ports, the display time may be shortened by one to two seconds while control commands are being successively executed. If the received data does not fit in the full screen, the displayed data is scrolled.

9.12.1 Registering/editing control command

Menu Top → PRESET COMMAND → COMMAND EDIT
Setting for Each command
Setting value [Table 9.19] Setting items of control command

You can create and edit up to 32 control commands.
The setting of this menu is not updated until the MENU/SET key is pressed. Make sure to press the MENU/SET key to update the setting.

[Table 9.19] Setting items of control command

Item	Setting			Description	Range
	COM	CC	CEC		
PORT	yes	yes	yes	Select "COM", "CC" or "CEC".	COM: Communication command [Default] CC: Contact closure CEC: HDMI CEC control
COM SIZE	yes	no	no	Set the number of bytes to be sent starting with the first byte.	0BYTE to 30BYTE [Default]: 0BYTE
DELAY	yes	yes	yes	Set the waiting time of the control command. Use this item for devices such as projectors that requires time to cool down after powering off.	0ms to 999s999ms [Default] 0ms
Communication port	yes	no	no	Set the following communication ports to "OFF" (not sending communication commands) or "ON" (sending communication commands). Those ports can be set separately, and communication commands can be sent to multiple communication ports at the same time. ・RS1: RS-232C CH1*5 ・RS2: RS-232C CH2*5 ・LOOP BACK: Internal loop back ・LAN1 to LAN8: LAN connection 1 to 8*6	OFF [Default] ON
COMMAND INPUT MODE	yes	no	no	Set the input mode of send command data. Select "ASCII" if "DATA" of "COMMAND" consists of only 0A, 0D, and 20 to 7D of ASCII codes. Select "HEX" if "DATA" of "COMMAND" includes other codes.	ASCII [Default] HEX
Send command data	yes	no	no	Set the command from the first byte according to the number of bytes set in "COM SIZE" (up to 30 bytes).	0A, 0D, 20 to 7D in ASCII, 00 to FF in hex [Default]: 20 (space)

[Table 9.20] Setting items of control command

Item	Setting			Description	Range
	COM	CC	CEC		
RECV DISPLAY	yes	no	no	Set whether received data is displayed or not.	OFF [Default] ASCII HEX
DELIMITER*1	yes	no	no	Set the delimiter to be sent at the end of the received data. "NONE": delimiter is not checked and all received data within the set timeout will be valid. Value other than "NONE": delimiter is checked and data received before delimiter will be valid.	NONE [Default] 00 to FF (Hex)
RCV CHECK *2	yes	no	no	Set whether reply command that may be returned is checked or not.	CHECK NOT CHECK [Default]
TIME OUT*3 *4	yes	no	no	Set the timeout time for reply command to a sent command.	0ms to 99s999ms [Default]: 0ms
RETRY *3 *4	yes	no	no	Set the number of retries to resend the same command again if no valid response is replied.	0 to 99 (times) [Default]: 0
INTERVAL *3 *4	yes	no	no	Set the retry interval to resend the command.	0ms to 99s999ms [Default] 0ms
ERROR*3 *4	yes	no	no	Set whether the next command is to be executed or not if no valid response is replied, even after completing retry for the set number of retries.	STOP [Default] EXEC: continue
Contact closure control	no	yes	no	Set the contact closure control. If you select "toggle operation", it can invert the condition of contact (open/close).	-: not control [Default] OFF: contact open ON: contact close TGL: toggle
Palse width	no	yes	no	Set the time of returning its original condition when you control the contact closure.	NONE: eternity [Default] 100ms to 9990ms (by 10ms)
HDMI CEC control*7	no	no	yes	Set the CEC control for the sink devices connected to OUT1 to OUT4.	-: not control [Default] POWER OFF POWER ON
Process for CEC error	no	no	yes	Set whether the next command is executed or not if no response is replied from the sink device that is controlled with CEC.	STOP [Default] EXEC: continue
MEMO	yes	yes	yes	Register a note up to 14 characters. The registered note is displayed when the control command is executed.	20 to 7D in ASCII codes except for 2C (,) [Default] 20 (space)

*1 If you set "RECV DISPLAY" to "OFF", you cannot set this item.
*2 If you set "RECV DISPLAY" to "ASCII" or "HEX", you cannot set this item.
*3 If you set only "LOOP BACK" of communication ports to "ON", you do not need to set this item.
*4 If you set all "RCV CHECK" to "NOT CHECK", you do not need to set this item.
*5 If you set "RS:RS-232C" to "ON", set "**9.10.2 RS-232C operation mode**" to "TRANSMITTER".
*6 If you set any LAN connections for "LAN1" to "LAN8" to "ON", set "**9.11.2 LAN operation mode**" to "TRANSMITTER".
*7 CEC: only power ON/OFF of the sink device can be controlled.

■ Setting loop back function

The MSD sends a communication command back to the MSD itself using the loop back function. It replies "OK" if processed normally while replying "NG" if parameter or command is incorrect. To check the reply command, set reply command 31 and 32 to "CHECK".

■ Setting PJLink

The MSD supports PJLink, which is a standard protocol to control projectors.
To use PJLink, select the LAN port for "COM port" so that you can select PJLink command when entering the send command data.

【See: 9.11.2 LAN operation mode】

[Table 9.21] PJLink command (class1) list

No.	Command										Description
1	%	1	P	O	W	R	(SP)	0	*CR*		Power off (Standby)
2	%	1	P	O	W	R	(SP)	1	*CR*		Power on (Lamp on)
3	%	1	P	O	W	R	(SP)	?	*CR*		Get power status
4	%	1	I	N	P	T	(SP)	1	*[1]	*CR*	Switch input to RGB
5	%	1	I	N	P	T	(SP)	2	*[1]	*CR*	Switch input to VIDEO
6	%	1	I	N	P	T	(SP)	3	*[1]	*CR*	Switch input to DIGITAL
7	%	1	I	N	P	T	(SP)	4	*[1]	*CR*	Switch input to STORAGE
8	%	1	I	N	P	T	(SP)	5	*[1]	*CR*	Switch input to NETWORK
9	%	1	I	N	P	T	(SP)	?	*CR*		Get input selection settings
10	%	1	A	V	M	T	(SP)	1	0	*CR*	Switch off video mute
11	%	1	A	V	M	T	(SP)	1	1	*CR*	Switch on video mute
12	%	1	A	V	M	T	(SP)	2	0	*CR*	Switch off audio mute
13	%	1	A	V	M	T	(SP)	2	1	*CR*	Switch on audio mute
14	%	1	A	V	M	T	(SP)	3	0	*CR*	Video+audio mute off
15	%	1	A	V	M	T	(SP)	3	1	*CR*	Video+audio mute on
16	%	1	A	V	M	T	(SP)	?	*CR*		Get mute settings
17	%	1	E	R	S	T	(SP)	?	*CR*		Get error status
18	%	1	L	A	M	P	(SP)	?	*CR*		Get time and status of lamp
19	%	1	I	N	S	T	(SP)	?	*CR*		Get list of switching input
20	%	1	N	A	M	E	(SP)	?	*CR*		Get projector name
21	%	1	I	N	F	1	(SP)	?	*CR*		Get manufacture name
22	%	1	I	N	F	2	(SP)	?	*CR*		Get product name
23	%	1	I	N	F	O	(SP)	?	*CR*		Get other information (optional of manufacturer)

(SP): space; (CR): delimiter

You can specify the input number from 1 to 9, but types and the number of selectable input connectors differ depending on the projector. "1" is displayed by default.

Reply command structure for PJLink commands:
The first 6 bites: the sent command data without change; the 7th bite: "="; after the 8th bite: processing result
For example, if a command, "%1POWR 1CR", is processed normally, the reply command, "%1POWR=OK CR" will be replied.
PJLink specifications regulate that projectors are required to reply the reply commands within 2 seconds after receiving the PJLink command. However, some projectors have different specifications. Check the manual of your projector and apply the response time indicated in the manual if there is one listed.

[Table 9.22] Reply commands to PJLink command (class1) (ASCII codes)

No.	Command												Description
1	%	1	x	x	x	x	=	O	K	(CR)			Terminated normally
2	%	1	x	x	x	x	=	E	R	R	1	(CR)	Mistake in command itself (Undefined command)
3	%	1	x	x	x	x	=	E	R	R	2	(CR)	Invalid parameter
4	%	1	x	x	x	x	=	E	R	R	3	(CR)	Currently not acceptable
5	%	1	x	x	x	x	=	E	R	R	4	(CR)	Malfunction of projector

[Tabel 9.23] Individual reply command of status acquisition commands

No.	Command															Description
Reply command to power status commands																
1	%	1	P	O	W	R	=	0	(CR)							Stand by
2	%	1	P	O	W	R	=	1	(CR)							Power ON
3	%	1	P	O	W	R	=	2	(CR)							Cooling
4	%	1	P	O	W	R	=	3	(CR)							Warming up
Reply command to input status commands																
1	%	1	I	N	P	T	=	1	*1	(CR)						RGB selected
2	%	1	I	N	P	T	=	2	*1	(CR)						VIDEO selected
3	%	1	I	N	P	T	=	3	*1	(CR)						DIGITAL selected
4	%	1	I	N	P	T	=	4	*1	(CR)						STORAGE selected
5	%	1	I	N	P	T	=	5	*1	(CR)						NETWORK selected
Get mute settings																
1	%	1	A	V	M	T	=	3	0	(CR)						Video+audio Mute OFF
2	%	1	A	V	M	T	=	1	1	(CR)						Video Mute ON
3	%	1	A	V	M	T	=	2	1	(CR)						Audio Mute ON
4	%	1	A	V	M	T	=	3	1	(CR)						Video+audio mute ON
Get error status																
1	%	1	E	R	S	T	=	*2	*3	*4	*5	*6	*7	(CR)		
Get time and status of lamp																
1	%	1	L	A	M	P	=	*8	(SP)	*9	(CR)					
Get list of input switching																
1	%	1	I	N	S	T	=	*10	(CR)							
Get projector name																
1	%	1	N	A	M	E	=	*11	(CR)							
Get manufacturer name																
1	%	1	I	N	F	1	=	*12	(CR)							
Get product name																
1	%	1	I	N	F	2	=	*12	(CR)							
Get other information (optional)																
1	%	1	I	N	F	O	=	*12	(CR)							

*1 Input number, which is any of "1" to "9", but types and the numbers of selectable input connectors differ depending on connected projectors.

*2 Fan error.

*3 Lamp error

*4 Temperature error

*5 Cover open error

*6 Filter error

*7 Other errors *2 to *7 0: Error not detected or no detect error function, 1: Warning, 2: Error

*8 Accumulated time of lamp, which is any of 0 to 99999.
(For projectors that do not count the accumulated time, the value is 0 at all times.)

*9 Whether the lamp illuminates or not (0 or 1).
0: Not illuminate, 1: Illuminates
For devices containing several lamps, accumulated time and lightning state for each device are replied in sequence. For example, if a device containing three lamps, the following command is replied:
"%1LAMP=accumulated time 1(SP) lightning state 1(SP) accumulated time 2(SP) lightning state 2(SP) accumulated time 3(SP) lightning state 3 *CR"*

*10 Source number, which is input switchable. Any of 11 to 59 (Meaning is the same as that of "%INPT" command). For devices containing several inputs, several statuses separated with a (SP) are sent. For example, for a device having two inputs, "%1INST= source number1(SP)source number2*CR*" is sent.

*11 20 to FF in hex: up to 64 characters.
*12 20 to 7F in hex: up to 32 characters.

9.12.2 Registering/editing reply command

Menu Top → PRESET COMMAND → RECV COMMAND EDIT
Setting for Each command
Setting value [Table 9.24] Setting items of return command

You can create and edit up to 32 reply commands.
The setting of this menu is not updated until the MENU/SET key is pressed. Make sure to press the MENU/SET key to update the setting.

[Table 9.24] Setting items of return command

Item	Description	Range
SIZE	Set the number of bytes from the first byte to be compared.	0 to 30 bytes [Default]: 0 byte
PROCESS	Select "STOP" (to stop the next operation), "EXEC" (to execute it), or "RETRY" (to send the command again) for when received data and reply command data match.	STOP EXEC [Default] RETRY: Resend commands
PJLink	Select whether PJLink commands are set or not for when input reply command data is input.	OFF [Default] ON
COMMAND INPUT MODE	Select the input mode of reply command data. "ASCII": For data consisting of only 0A, 0D, 20 to 7D (text) "HEX": For data including other codes	ASCII [Default] HEX
DATA	Set the command to be compared with the received data from the first byte to the byte count set in "SIZE". If using alphabets (A to Z, a to z), make sure to distinguish capital and lower case letters. (Up to 30 bytes)	0A, 0D, and 20 to 7D of ASCII code or 00 to FF (Hex) [Default]: 20 (Space) (Values described above all with hex)
MASK	Received data is compared with MASK DATA without "AND" of each bit and reply command data. (Use this item to determine the state using the received data bit. Settable if "COMMAND INPUT MODE" is set to "HEX"; if "ASCII" is selected, "FF" is set automatically.)	00 to FF (Hex) [Default]: All: "FF"
MEMO	Register a note up to 14 characters. When reply command is received, the registered note is displayed.	20 to 7D of ASCII code except for 2C (,) [Default]: All: Spaces

Those default values do not apply to reply commands 31 and 32

■ Setting loop back function

If the MSD sends a communication command back to the MSD itself using the loop back function, the MSD replies "OK" if processed normally while it replies "NG" if parameter or command is incorrect. (This differs from reply commands to communication commands received externally; not loop back.) Since "OK" and "NG" are registered to reply commands 31 and 32 by Factory default, respectively, do not edit or delete those commands if you use the loop back function and check reply commands.

。

[Table 9.25] Default value of reply command

Number	SIZE	PROCESS	DATA	MASK	MEMO
1	0 byte	EXEC	All: 00	All: FF	All: 20 (space)
2	0 byte	EXEC	All: 00	All: FF	All: 20 (space)
:	:	:	:	:	:
30	0 byte	EXEC	All: 00	All: FF	All: 20 (space)
31	2 bytes	EXEC	OK	All: FF	OK
32	2 bytes	STOP	NG	All: FF	NG

■ Setting PJLink

See: "**Setting PJLink**".

■ **Mask data**

The received data without mask data and "AND" of each bit is compared with the reply command data. Set "MASK" to "FF". Since "FF" is set by Factory default, you do not need to change the mask data normally. Only to determine the status using bits of the received data, change the setting.

[If ASCII codes (text) are replied from an external device]

Since the received data and "Reply command data" are compared without any changes, set "MASK" to "FF". (If you set "COMMAND INPUT MODE" of reply command to "ASCII", it is automatically set to "FF".)

For example, if "0" of ASCII codes ("30" in hex) is replied:

	Binary		Binary	Hexadecimal
(Received data)	00110000	& (MASK)	11111111	=30
(Reply command data)	00110000			=30 matched

```
DATA1:30 00 00 00 00
MASK1:FF FF FF FF FF
```

[If status is determined using bits of the received data]

Set only bits that determine the Mask data to "1" and set other bits to "0".

For example, if determining status using the second bit from the left:

	Binary		Binary	Hexadecimal
(Received data)	11111111	& (MASK)	01000000	=40
(Reply command data)	01000000			=40 matched

	Binary		Binary	Hexadecimal
(Received data)	10111111	& (MASK)	01000000	=00
(Reply command data)	01000000			=40 not matched

```
DATA1:40 00 00 00 00
MASK1:40 FF FF FF FF
```

9.12.3 Command link

Menu	Top → PRESET COMMAND → COMMAND LINK
Setting for	[Table 9.26] Control command execution condition
Setting value	OFF [Default], COMMAND 1 to COMMAND 32

The MSD has 108 command execution conditions as shown below. If these execution conditions are met, control commands which are associated beforehand will be executed. One execution condition can be associated to up to 10 commands. If several commands are associated, commands are executed in order of registration. If the same command is associated several times, it is repeatedly executed.

Control command execution button can be toggled.
Set "TOGGLE " to "ON" to enable PLANE-B, and then you can select execution plane ("AUTO", "A(PLANE-A)", or "B(PLANE-B)") at the time of power ON from "STARTUP". If you select "AUTO", the condition at the time of power OFF will be maintained.

The setting of this menu is not updated until the MENU/SET key is pressed. Make sure to press the MENU/SET key to update the setting.

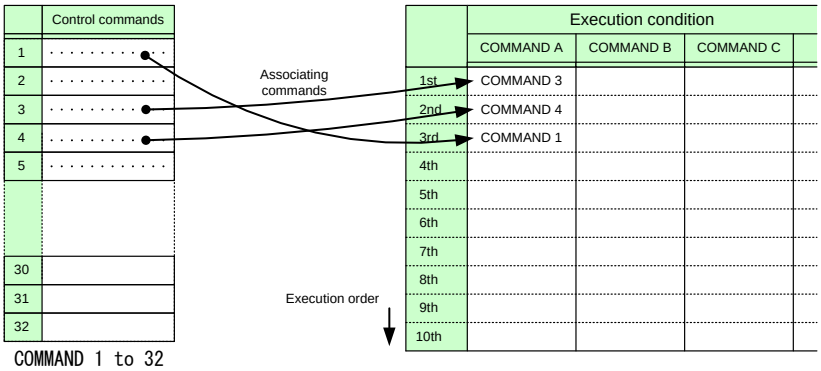

[Figure 9.25] Associating control command

[Table 9.26] Control command execution condition (Ex: MSD-7204UHD)

Execution condition	Function	Execution condition	Function
POWER ON	Controlling power switch	COMMAND A to I, PLANE-A	Controlling command execution keys
STANDBY		COMMAND A to I, PLANE-B	
DISPLAY1 POWER ON	Controlling sink device power of OUT1	DISPLAY3 POWER ON	Controlling sink device power of OUT3
DISPLAY1 POWER OFF		DISPLAY3 POWER OFF	
VIDEO:OUT1-IN1 to VIDEO:OUT1-IN9, VIDEO:OUT1-OFF	Selecting video input channel of OUT1	VIDEO:OUT3-IN1 to VIDEO:OUT3-IN9, VIDEO:OUT3-OFF	Selecting video input channel of OUT3
AUDIO:OUT1-IN1 to AUDIO:OUT1-IN9, AUDIO:OUT1-OFF	Selecting audio input channel of OUT1	AUDIO:OUT3-IN1 to AUDIO:OUT3-IN9, AUDIO:OUT3-OFF	Selecting audio input channel of OUT3
DISPLAY2 POWER ON	Controlling sink device power of OUT2	DISPLAY4 POWER ON	Controlling sink device power of OUT4
DISPLAY2 POWER OFF		DISPLAY4 POWER OFF	
VIDEO:OUT2-IN1 to	Selecting video input	VIDEO:OUT4-IN1 to	Selecting video input

VIDEO:OUT2-IN9, VIDEO:OUT2-OFF	channel of OUT2	VIDEO:OUT4-IN9, VIDEO:OUT4-OFF	channel of OUT4
AUDIO:OUT2-IN1 to AUDIO:OUT2-IN9, AUDIO:OUT2-OFF	Selecting audio input channel of OUT2	AUDIO:OUT4-IN1 to AUDIO:OUT4-IN9, AUDIO:OUT4-OFF	Selecting audio input channel of OUT4

9.12.4 Command execution

Menu Top → PRESET COMMAND → COMMAND EXECUTION
Setting value CMD 1 to CMD 32, COMMAND A to COMMAND I

You can execute the registered control commands (CMD 1 to CMD 32).
Only registered control command numbers are displayed as settable values. To execute the control command, press the "MENU/SET" key.

【See: 9.12.1 Registering/editing control command】

9.12.5 Invalid time during control command execution

Menu Top → PRESET COMMAND → INVALID TIME
Setting value 0s000ms to 999s999ms [Default]: 0s000ms

You can set the waiting time from starting control command execution to receiving the next command. Use this menu to prevent repeated execution caused by pressing the control command execution key twice.

The longer time either of control command execution time or the time set in this menu will be applied as the invalid operation time. Only operations from ports that execute control commands will be invalid; operations from other ports can be performed. For example, if you execute a control command from the front panel, you cannot perform all operations from the front panel until the control command execution time or time set in this menu passes. However, even during invalid operation time, DISPLAY POWER and CHANNEL SELECT commands for different outputs can be executed consecutively .

9.12.6 Initializing registered commands and associations

Menu Top → PRESET COMMAND → INITIALIZE
Setting value
CMD 1 to CMD 32: Control command
RCV 1 to RCV 32: Reply command
COMMAND A to I: Control command association
POWER ON: Control command association
STANDBY: Control command association
DISPLAY1 POWER ON to DISPLAY4 POWER OFF: Control command association
VIDEO:OUT1-IN1 to VIDEO:OUT4-OFF: Control command association
AUDIO:OUT1-IN1 to AUDIO:OUT4-OFF: Control command association

You can initialize the following commands and associations:

- Control commands registered in "**9.12.1 Registering/editing control command**"

- Reply commands registered in "**9.12.2 Registering/editing reply command**"
- Associations of control commands registered in "**9.12.3 Command link**"

Use this menu to delete or set them from the first step again.

A long buzzer will sound when the initialization is completed by pressing the MENU/SET key.

9.12.7 Command execution key: Lighting condition

Menu Top → PRESET COMMAND → COMMAND TALLY
Setting for Each control command execution key
Setting value
REGISTERED [Default][*1]: Lights if a control command is registered
EXECUTION: Lights while a control command is executed[*1 *2]

If you set "LINK" to "ON", you can change all lighting conditions at once.

[*1] There are two planes (PLANE A and B) for each execution condition of COMMANDs A to I. If you register control commands for both planes, the control commands are executed alternatively every time you press the command key as follows.

[Table 9.27] Lighting conditions of control command execution keys

Lighting condition	If you register a command only for one plane	If you register commands for both two planes
REGISTERED	Lights if a control command is registered	Lights if PLANE A will be executed at the next press; blinks if PLANE B will be executed at the next press.
EXECUTION	Lights while a control command is executed	Lights if PLANE A will be executed at the next press; turned off if PLANE B will be executed at the next press.

[*2] If execution time is 500 ms. or shorter, it lights for only 500 ms. It can be set to blinking in "**9.12.8 Blinking time of** " that follows.

9.12.8 Blinking time of command execution key

Menu Top → PRESET COMMAND → FLASH TIME
Setting for Each control command execution key, each display power key
Setting value
EXECUTION: Blinks while a control command is being executed [Default]
OFF: Not blink
1sec. to 1000sec.: Blinks for the specified time (1 to 1000 sec.)

You can set the blink time of command execution keys and power switch of sink devices during command execution.

9.13 Preset memory

9.13.1 Loading cross pooint

Menu Top → PRESET MEMORY → LOAD CROSS POINT
Setting value No.1 to No.9

You can load the I/O channel settings of video and audio saved in the cross point memory.
The setting of this menu is not updated until the MENU/SET key is pressed. Make sure to press the MENU/SET key to update the setting.

【See: ：9.13.2 Saving cross point】

Note:
Functions of control command execution keys (COMMAND A to COMMAND I) changes and the UNLOCK key LED shows each status as follows.

- UNLOCK key lights: Registered control commands are executed.
- UNLOCK key blinks: Registered cross point memories are loaded.
- UNLOCK key does not light: The control command execution keys are locked.

9.13.2 Saving cross point

Menu Top → PRESET MEMORY → SAVE CROSS POINT
Setting value No.1 to No.9

You can save the I/O channel settings of video and audio into the cross point memory.
Up to nine cross point memories can be saved with their name (up to 10 characters). If you set "---" (not control) for "**9.13.3 Editing cross point**", a writing method (CONTINUE or DELETE) can be selected.
The setting of this menu is not updated until the MENU/SET key is pressed. Make sure to press the MENU/SET key to update the setting.

■ Writing method
"CONTINUE": "---" (not control) will be kept in the cross point memory.
"DELETE": the current input channel settings will be overwritten.

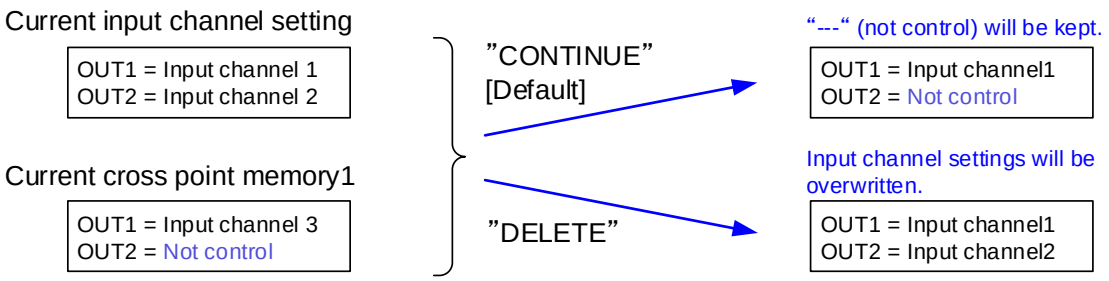

[Figure 9.26] Saving cross point

9.13.3 Editing cross point

Menu Top→PRESET MEMORY→EDIT CROSS POINT
Setting for Each cross point memory
Setting value [Table 9.28] Editing items of cross point

[Table 9.28] Editing items of cross point

Setting item	Setting value	Default
Output channel (OUT)	1 to 4	-*
Video input channel (V)	--- (Not control), 1 to 9, OFF	---
Audio input channel (A)	--- (Not control), 1 to 9, OFF	---
Memory name (NAME)	20 to 7D of ASCII code	20 (space)

*Setting input channels of video and audio for each output channel

You can edit settings of the cross point memory.
First, select the memory number and press the MENU/SET key, and then edit settings.
The setting of this menu is not updated until the MENU/SET key is pressed. Make sure to press the MENU/SET key to update the setting.

■ Not controlling channel

If you select "---" when setting input channel of V or A, channels are not controlled.
Outputs that are set not to be controlled are not switched when cross point memory is loaded.

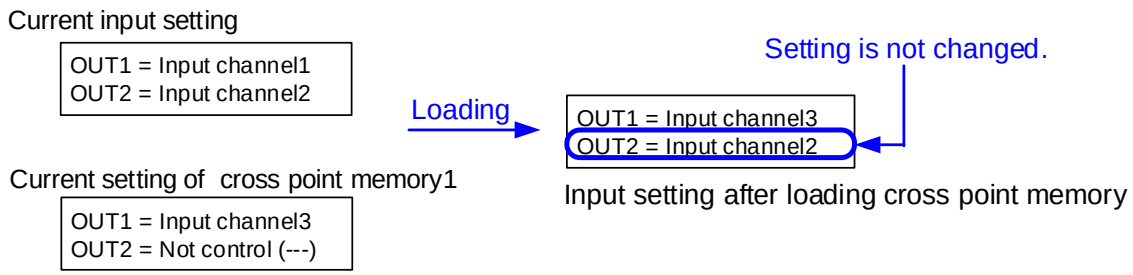

[Figure 9.27] Loading edited cross point memory

9.13.4 Loading all settings

Menu	Top → PRESET MEMORY → LOAD ALL SETTING
Setting value	No.1 to No.8

You can load all settings saved in the preset memory.
Once you perform this operation, all settings related to video and audio I/O except for some environmental settings will be updated. Operate this menu with great attention.
This menu is not displayed if setting is not saved in memory. Since no setting is saved in any memories by Factory default, this menu is not displayed.
The setting of this menu is not updated until the MENU/SET key is pressed. Make sure to press the MENU/SET key to update the setting.

【See: 9.13.5 Saving all settings】

9.13.5 Saving all settings

Menu Top → PRESET MEMORY → SAVE ALL SETTING
Setting value No.1 to No.8

You can save up to eight preset memories (up to 10 characters) of the following settings:
The setting of this menu is not updated until the MENU/SET key is pressed. Make sure to press the MENU/SET key to update the setting.

[Table 9.29] Settings can be saved in preset memory

Menu	Item
Selecting input channels (P.29)	Selecting input channels
Setting position, size, and masking (P.52)	Output resolution, Aspect ratio for sink device, Aspect ratio, Aspect ratio control, Overscan, Display position, Display size, Masking, Background color, Test pattern
Quality setting (P.58)	Sharpness, Brightness, Contrast, HUE, Saturation, Black level
Input settings (P.61)	No-signal input monitoring, Setting HDCP input, Signal type of analog input, Automatic detection of input video intertuption, Selecting signal of DVI input connector, Priority of input channel automatic switching, Masking time after automatic switching of input channel
Setting input timing (P.66)	The total number of horizontal dots, Start position, Active area, Automatic measurement of start position, Automatic setting of input timing, Tracking
Output settings (P.73)	Output mode, Synchronous signal output with no input video, Output video with no input video, Window transaction effect, Window transaction speed, Wipe color, HDCP, The number of HDCP retries, Deep Color, CEC connection
Audio settings (P.80)	Output level, Output mute, Input selection, Input level, Lip sync, Sampling frequency, Audio output connector, Multi channel audio output, Test tone
EDID (P.85)	EDID, Resolution for PCs, Input resolution for AV devices, Deep Color, Audio format, Speaker configuration

9.13.6 Copying output setting

Menu	Top→PRESET MEMORY→COPY OUTPUT MEMORY
Setting value	OUT1 to OUT4 → OUT1 to OUT4

You can copy the setting data of the selected output channel to other output channels using "MENU/SET" key.

[Table 9.30] Settings to be copied

Menu	Description
Selecting input channels (P.30)	Selecting input channels
Setting position, size, and masking (P.52)	Output resolution, Aspect ratio for sink device, Aspect ratio, Aspect ratio control, Overscan, Display position, Display size, Masking, Background color, Test pattern
Quality setting (P.58)	Brightness, Contrast, Gamma
Output settings (P.73)	Output mode, Synchronous signal output with no input video, Output video with no input video, Window transaction effect, Window transaction speed, Wipe color, HDCP, The number of HDCP retries, Deep Color, CEC connection, Priority of input channel automatic switching, Masking time after automatic switching of input channel, Channel switching mode
Audio settings (P.80)	Output level, Output mute, Lip sync, Sampling frequency, Audio output connector, Multi channel audio output, Test tone
Setting bitmap (P.117)	Outputing bitmap image, Background color, Aspect ratio, Display position, Input channel assignment, Bitmap output at startup

Note:

Please note that only one CEC connection is avairable, multiple input and outputs cannot be connected. For example, CEC connection is copied from this menu, the lowest output (OUT1) is connected preferentially and the sink device connected to OUT2 cannot output video with CEC.

9.13.7 Startup setting

Menu Top → PRESET MEMORY → START UP
Setting value **[Table 9.31] Startup settings**

[Table 9.31] Startup settings

Item	Setting value	Operation at startup
Last channel	LAST CHANNEL [Default]	Starts with the setting last time the MSD powered off.
Preset memory	PRESET MEMORY 1 to PRESET MEMORY 8*	Starts with the settings saved in the preset memory. For settings that are not saved in the preset memory, it starts up with the settings of the last MSD power off.
Cross point memory	CROSS POINT 1 to CROSS POINT 9	Starts with the channel settings saved in the selected cross point memory. For settings other than channel settings, starts up with the settings of the last MSD power off.
Channel OFF	CHANNEL OFF	Channel setting will be OFF. For settings other than channel setting, starts up with the settings of the last MSD power off.

*Only registered preset memory numbers are displayed.

You can set the memory loading at startup.

9.14 Setting bitmap

9.14.1 Sending bitmap file

You can set the bitmap image to be displayed on the sink device. Up to four bitmaps can be registered. IDK's logo is displayed by Factory default.
Bitmaps can be enlarged but cannot be reduced. The larger the resolution is, the longer the output time will be, and it may take a maximum of approximately six seconds to output a bitmap. Register a bitmap having smaller resolution than that of the sink device.

■ **Conditions of bitmap file**

The MSD supports DIB (Device Independent Bitmap) with a header generally used for Windows, and those files have to meet the following requirements:

[Table 9.32] Conditions of bitmap file

Item	Condition
File header	"BITMAPFILEHEADER"
Information header	"BITMAPCOREHEADER"(for OS/2) / "BITMAPINFOHEADER"(for Windows)
The number of colors	2 colors (monochrome, 1 bit), 16 colors (4 bits), 256 colors (8 bits), 16.77 million colors (TRUE COLOR, 24 bits)
Resolution	The maximum resolution: [Horizontal resolution x Vertical resolution x The number of bytes per pixel] = 8,388,608 bytes or less. If you register several bitmaps, the total bytes of all bitmaps should be 8,388,608 bytes or less. (Aspect ratio does not matter as long as it is within the maximum resolution). Bytes per pixel: 1 byte per pixel for 2 colors (monochrome, 1 bit), 16 colors (4 bits), and 256 colors (8 bits); 3 bytes per pixel for 16.77 million colors (TRUE COLOR, 24 bits).
Compression format	No compression (BI_RGB), 8 bit-run-length compression (BI_RLE8), 4 bit-run-length compression (BI_RLE4)

■ **Transferring bitmap file**

Use the WEB menu to transfer bitmap files.
Step (1) If the memory area is divided, select the registered area of the bitmap file.
Step (2) Select the target bitmap file using the "FILE" button.
Step (3) Click the "SEND" button to display the dialog box and click the "OK" button to transfer the bitmap file.
【See: 0

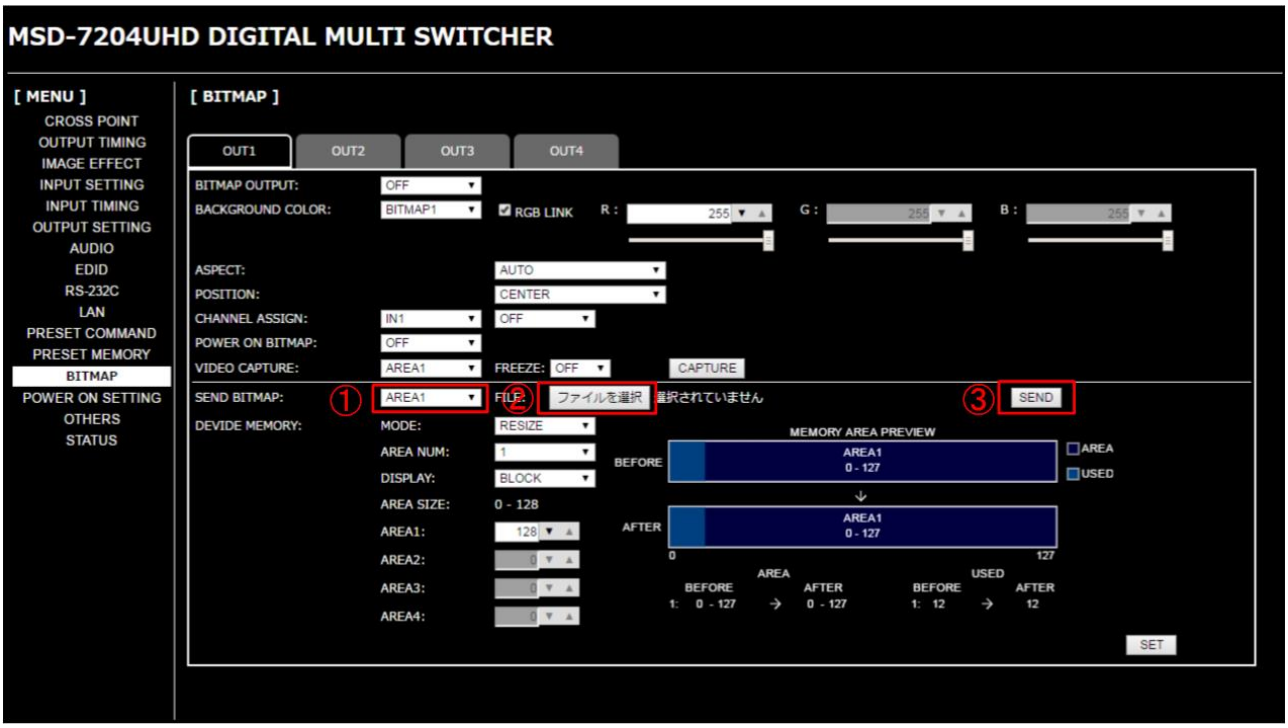

[Fig. 9.28] Transferring bitmap

Once bitmap file is transferred correctly, the message is displayed. Click the "OK" button of the dialog box to register bitmap file.
Do not operate the WEB menu or turn off the MSD until the registration completes.

[Table 9.33] Bitmap file transfer error message

Error message	Description
File Name is invalid.	The specified file name is not correct.
File Format Error is happened.	The MSD does not support this file.
File Size exceeds the capacity.	The file exceeds the maximum resolution.
Memory Allocation Error is happened.	The memory for temporarily saving bitmap file could not be reserved. The error may possibly be solved by rebooting the MSD and sending the bitmap file again.

9.14.2 Outputing bitmap image

Menu	Top → BITMAP → BITMAP OUTPUT
Setting for	Each output channel
Setting value	OFF [Default], ON (BITMAP1 ON to BITMAP4 ON)

You can enable/disable the bitmap image output.
If several bitmaps are registered, select the bitmap number you want to output.

9.14.3 Background color

Menu	Top → BITMAP → BACKGROUND COLOR
Setting for	Each output channel, each bitmap
Setting value	R / G / B: 0 to 255 [Default]: R / G / B: 255 (white)

You can set the background color of the bitmap.
If you set "LINK" to "ON", you can set only Red (R). Settings of Green (G) and Blue (B) are also changed according to the setting of the Red (R).
If more than one bitmap is registered to the MSD, you can confirm the bitmap number at left of the second line on the VFD screen.

9.14.4 Aspect ratio

Menu	Top → BITMAP → ASPECT
Setting for	Each output channel, each bitmap
Setting value	[Figure 9.29] Setting aspect ratio

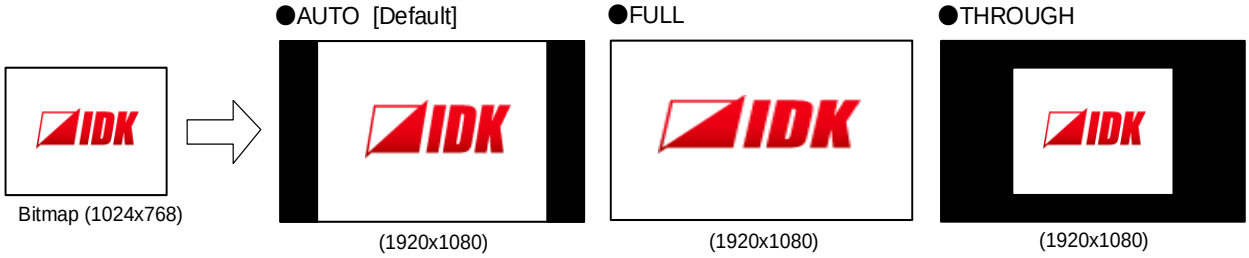

[Figure 9.29] Setting aspect ratio

You can set the aspect ratio of bitmap.
If you select "AUTO", the aspect ratio is kept. However, if bitmap is larger than output resolution, only a portion of the bitmap is displayed.

9.14.5 Display position

Menu	Top → BITMAP → POSITION
Setting for	Each output channel, each bitmap
Setting value	[Figure 9.30] Display position

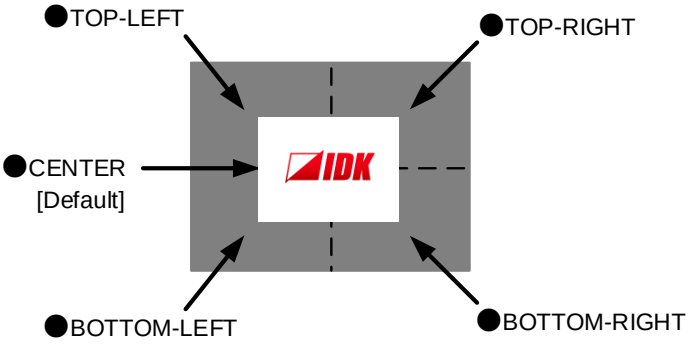

[Figure 9.30] Display position

You can set the display position of the bitmap.

9.14.6 Input channel assignment

Menu	Top → BITMAP → CHANNEL ASSIGN
Setting for	Each input channel, each output channel
Setting value	OFF [Default], ON (BITMAP1 ON to BITMAP4 ON)

A bitmap can be treated as an input video source by assigning the bitmap to any input that is not currently being used. Set "**9.14.2 Outputing bitmap image**" to "OFF".
If multiple bitmaps are registered, select the bitmap number to be output.
If you switch a normal image to a bitmap image, it takes longer time to output the image, and you cannot perform other operations while the bitmap is being written and displayed.
The setting of this menu is not updated until the MENU/SET key is pressed. Make sure to press the MENU/SET key to update the setting.

9.14.7 Bitmap output at startup

Menu	Top → BITMAP → POWER ON BITMAP
Setting for	Each output channel
Setting value	OFF [Default], ON (BITMAP1 ON to BITMAP4 ON)

You can enable or disable bitmap output at the time of the MSD startup.

9.14.8 Dividing memory area

Menu Top→BITMAP→DIVIDE MEMORY
Setting value [Table 9.34] Dividing memory area

You can register up to four bitmaps within the available memory area by dividing the memory. You can select one of three dividing modes or specify the size you want to divide manually.
Memory areas are controlled by blocks. 1 block = 64K bytes; 128 blocks = 8M bytes in total
The setting of this menu is not updated until the MENU/SET key is pressed. Make sure to press the MENU/SET key to update the setting.

[Table 9.34] Dividing memory area

Setting item	Setting value	Default
MODE (dividing mode)	RESIZE,DELETE,AUTO	RESIZE
NUMBER (the number of partitions)	1 to 4	1
DISPLAY (displaying method)	BLOCK,BYTE	BLOCK
End block position	0 to 127	127

■ Dividing mode

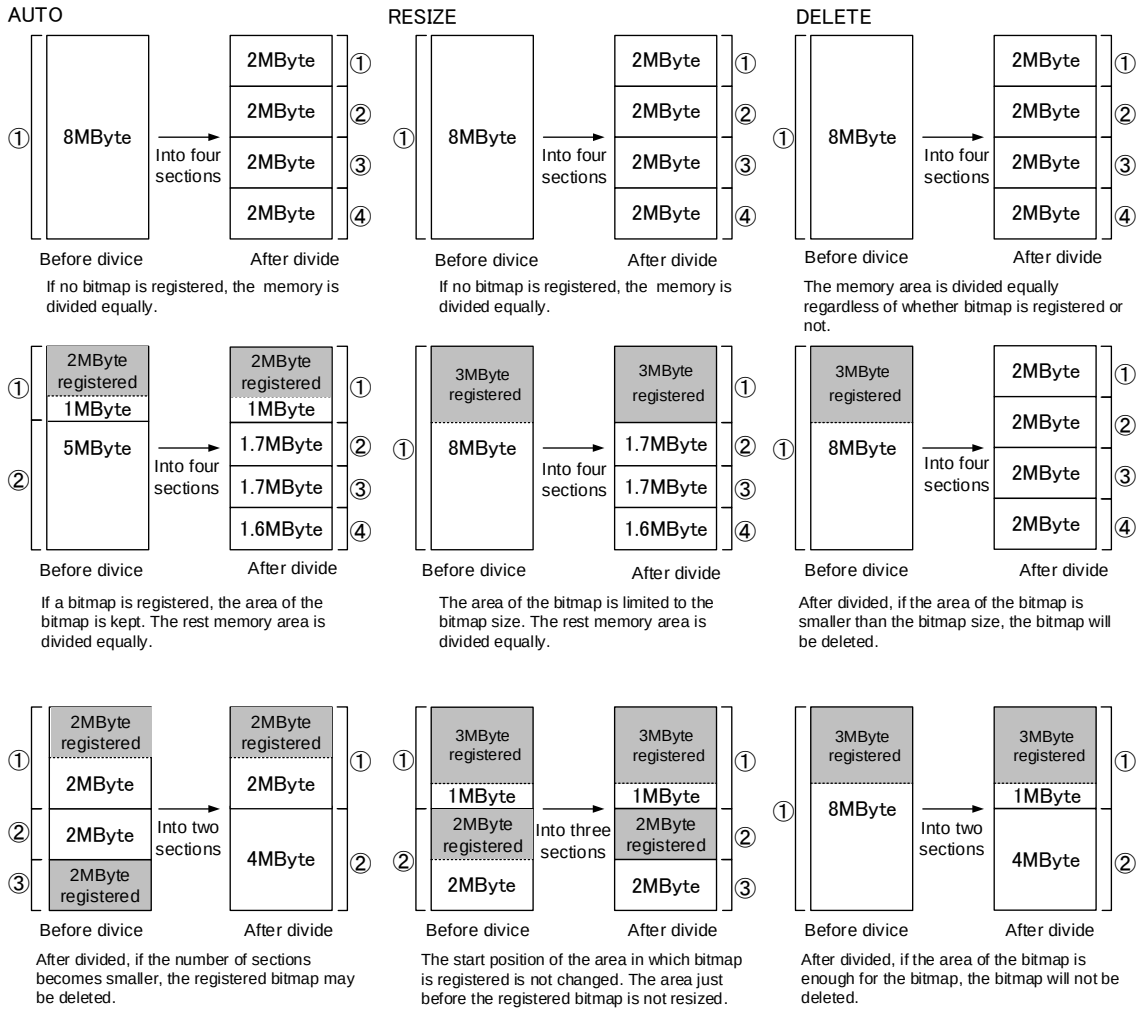

[Figure 9.31] Dividing mode

■ Displaying method

"BLOCK"

If you select "BLOCK" for "DISPLAY", the current start and end block positions are displayed on the left of the VFD screen. If a bitmap is registered, the final block position is displayed in parentheses. The start and end block positions after divide are displayed on the right. If you want to specify the after-divide size directly, change the end block position.

If the currently-registered bitmap is deleted because of specifying the size directly, an "S" or "E" is displayed in the upper right.

"BYTE"

The currently-reserved memory size is displayed on the left. If a bitmap is registered, the number of bytes is displayed in parentheses. The memory size after divide is displayed on the right so that you can specify directly the after-division memory size.

If the currently-registered bitmap is deleted because of specifying the size directly, an "S" or "E" is displayed in the upper right.

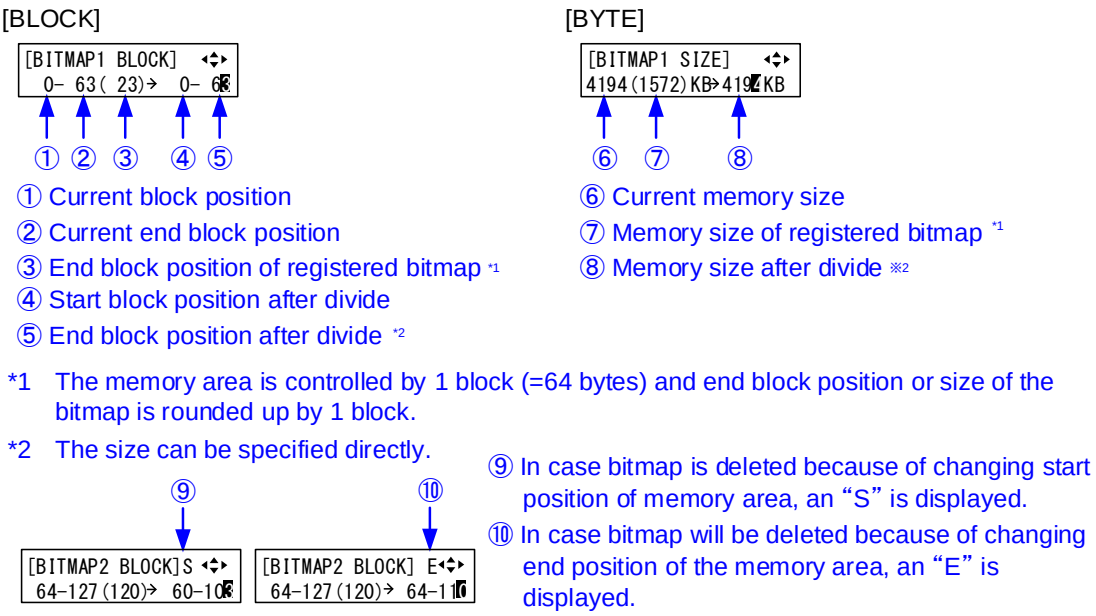

[Figure 9.32] "BLOCK" and "BITE"

9.14.9 Input image capture

Menu Top → BITMAP → VIDEO CAPTURE
Setting value [Table 9.35] Setting items for input video capture

[Table 9.35] Setting items for input video capture

Setting item	Setting value	Default
Output channel	OUT1,OUT2, OUT3, OUT4	OUT1
Register number	No.1 to No.4*	No.1

* Settable if memory area is divided

An input video can be treated as a bitmap by capturing and registering it. The maximum resolution is [Horizontal resolution x Vertical resolution x 3 (the number of bytes per pixel; "3" fixed)] 8,388,608 bytes or less. In order to register multiple bitmaps and captured images, the total resolution of all bitmaps and captured images should be 8,388,608 bytes or less (aspect ratio does not matter).

Captured images can be displayed in the same size or enlarged size but not in the reduced size. Larger resolutions require a longer loading time; it may take approximately six seconds at a maximum. Register images having a lower resolution than that of the sink device.
If an input image is larger than the output resolution, capture it with a reduced image size. If an input image is the same size or smaller, capture it without changing its size. You can register any images having a lower resolution by setting "**9.3.1 Output resolution**" to smaller resolution and capturing the video.

To freeze the input video temporarily, press the "MENU/SET" key. To register the frozen image, select "YES" and then press the "MENU/SET" key again. To release freeze, press the "ESC" key. It can be released automatically when an input channel is switched or input signal changes.

If resolution of input video is too large against the reserved memory area and it causes a significant memory shortage, a message "MEMORY SIZE OVER" will be displayed after you press the "MENU/SET" key. In such a case, registration cannot be executed.

From browser

You can capture and save an input video through a WEB browser as well.

Step1) If the memory area is divided, select the registered area of the captured image.

Step2) Set "FREEZE" to "ON". You can skip this step. This freeze is only temporary. If input channel is switched or input signal changes, the freeze is released and the input video will be output.

Step3) Click the "CAPTURE" button to display the dialog box. Click the "OK" button of the dialog box to capture the video. If you skip the Step2, the video freezes automatically just after clicking the "OK" button.

【See: 8.8 Web menu operation】

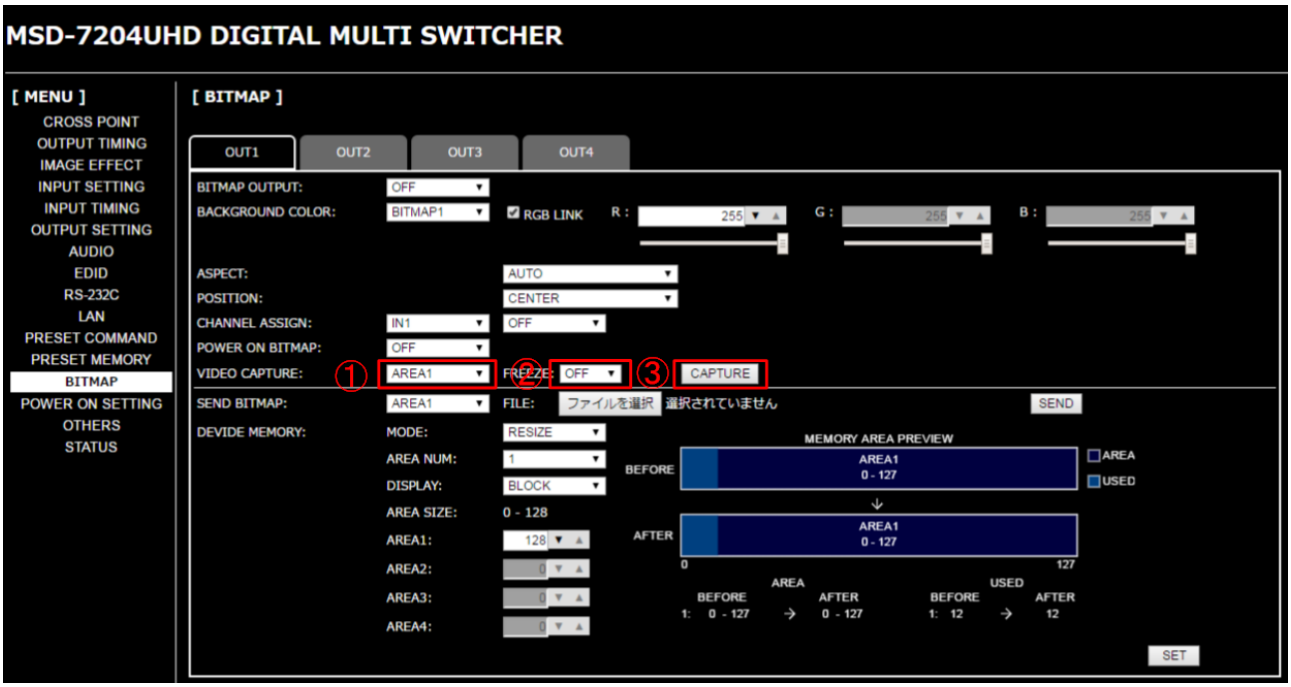

[Fig. 9.33] WEB menu

When capture completes correctly, the message is displayed. Click the "OK" button of the dialog box to complete

Do not operate the WEB menu or turn off the MSD until the registration completes.

If capture does not start correctly or failed, an error message below will be displayed.

[Table 9.36] Error messages when capture fails

Error message	Description
Video Capture is not available because there is no input signal.	Since input video is not displayed, the video cannot be captured.
Memory Size Error is happened.	Since this input video data is larger than reserved memory area, it cannot be saved.

9.15 Startup settings

9.15.1 Power switch

Menu Top → POWER ON SETTING → POWER SWITCH
Setting value AUTO [Default], OFF, ON

You can set the MSD's power-on state.
"AUTO" : The same state as the MSD was before turning off the main power switch.
"OFF" : Standby
"ON" : Powered on.

【See: 8.1 Power】

[Table 9.37] Power-on state

Setting value	The power state before it is tuned "OFF".	The power state after it is tuned "ON".
AUTO	Standby	Standby
	ON	ON
OFF	Standby	Standby
	ON	
ON	Standby	ON
	ON	

Note:
The power-on state of the MSD is the same as shown above even after power failure or external AC power operation.

9.15.2 DISPLAY POWER keys

Menu	Top → POWER ON SETTING → DISPLAY POWER
Setting for	Each output channel
Setting value	AUTO [Default], OFF, ON

You can set the DISPLAY POWER key state for when the MSD is powered on.
"AUTO" : The same state as it was before turning off the MSD or standby.
"OFF" : DISPLAY POWER keys do not operate.
"ON" : Commands are exexuted DISPLAY POWER keys are executed.

【See: 9.12.3 Command link】

[Table 9.38] DISPLAY POWER keys state when the MSD is turned "ON"

State		Result
Setting value	The DISPLAY POWER key state before the MSD is turned off or standby	The DISPLAY POWER key state after the MSD is turned on
AUTO	OFF	OFF
	ON	ON
OFF	OFF	OFF
	ON	
ON	OFF	ON
	ON	

9.15.3 UNLOCK keys

Menu Top → POWER ON SETTING → COMMAND UNLOCK
Setting value AUTO [Default], COMMAND, PRESET LOAD, LOCK

You can set the UNLOCK key state for when the MSD is powered on.
"AUTO" : The same state as it was before turning off the MSD or standby
"COMMAND" : UNLOCK key lights, and control commands can be executed.
"PRESET LOAD" : UNLOCK key blinks, and preset memories can be executed.
"LOCK" : UNLOCK key LED is turned off, control command keys are locked.

[Table 9.39] UNLOCK key state for when the MSD is turned on

State		Result
Setting value	The UNLOCK key state before the MSD is turned off or standby.	The UNLOCK key state after the MSD is turned on.
AUTO	Lights: COMMAND	Lights: COMMAND
	Blinks: PRESET LOAD	Blinks: PRESET LOAD
	OFF: LOCK	OFF: LOCK
COMMAND	Lights: COMMAND	Lights: COMMAND
	Blinks: PRESET LOAD	
	OFF: LOCK	
PRESET LOAD	Lights: COMMAND	Blinks: PRESET LOAD
	Blinks: PRESET LOAD	
	OFF: LOCK	
LOCK	Lights: COMMAND	OFF: LOCK
	Blinks: PRESET LOAD	
	OFF: LOCK	

9.15.4 Operation lock

Menu Top → POWER ON SETTING → OPERATION LOCK
Setting value AUTO [Default], UNLOCK, LOCK

You can set the operation lock state for when the MSD is powered on.
"AUTO" : The same state as it was before turning off the MSD or standby.
"UNLOCK" : Operationis unlocked.
"LOCK" : Operation is locked.

【See: 9.16.1 Operation lock mode】

[Table 9.40] Operation lock state when the MSD is turned on

Condition		Result
Setting value	The operation lock state before the MSD is turned off or standby.	The operation lock state after the MSD is turned on.
AUTO	UNLOCK	UNLOCK
	LOCK	LOCK
UNLOCK	UNLOCK	UNLOCK
	LOCK	
LOCK	UNLOCK	LOCK
	LOCK	

9.16 Other settings

9.16.1 Operation lock mode

Menu	Top → OTHERS → OP LOCK MODE
Setting for	CHANNEL, CHANNEL MODE, MENU, PRESET LOAD, COMMAND, COMMAND MODE, DISPLAY POW
Setting value	LOCK [Default], UNLOCK

You can set the operation lock mode for each key group on the front panel.

[Table 9.41] Keys for operation lock

Item	Target key of operation lock
CHANNEL	Input channel selection keys
CHANNEL MODE	SWITCHING MODE key (SWITCHING MODE)
MENU	MENU/SET key (MENU/SET)
PRESET LOAD	Locks loading cross point ・When the UNLOCK key blinks: COMMAND A to COMMAND I cannot be selected. ・When the UNLOCK key is turned off or lights: The UNLOCK key cannot blink.
COMMAND	Locks control command execution ・When the UNLOCK key lights: COMMAND A to COMMAND I cannot selected. ・When the UNLOCK key is turned off or blinks: The UNLOCK button cannot light.
COMMAND MODE	UNLOCK key ・When the UNLOCK key lights: Control command can be executed. ・When the UNLOCK key blinks: Cross point can be loaded.
DISPLAY POW	Power key of sink device (DISPLAY POWER)

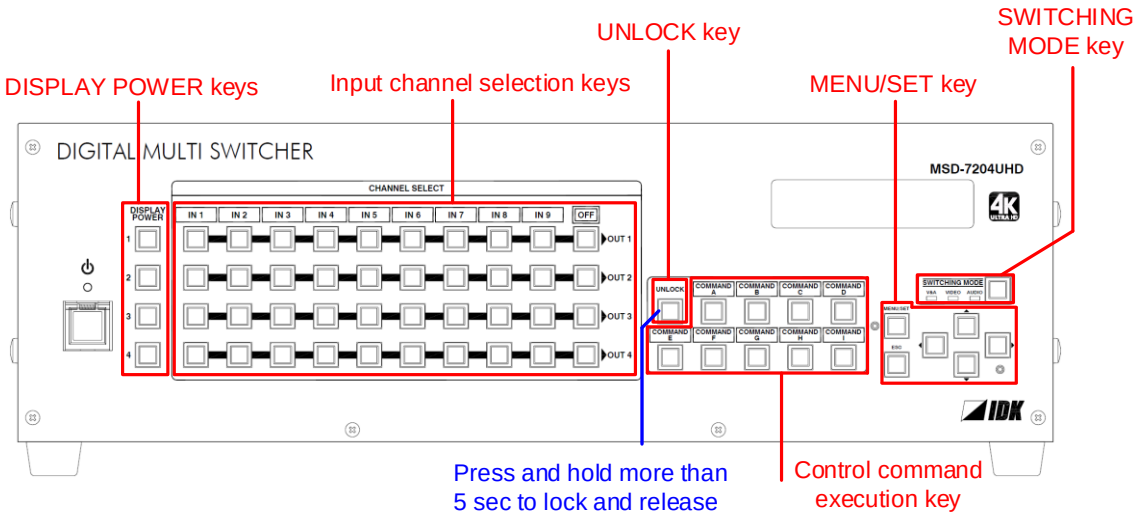

[Figure 9.34] Keys for operation lock (MSD-7204UHD)

9.16.2 Buzzer

Menu	Top → OTHERS → BUZZER
Setting value	ON [Default], OFF

You can turn ON/OFF the buzzer function (sounding every time you press a front panel key).

9.16.3 Automatic lock for control command execution keys

Menu	Top → OTHERS → COMMAND AUTO LOCK
Setting value	ON [Default], OFF

If you select "ON" and no operation of control command execution keys is performed for 30 seconds, these keys are locked.

9.16.4 Power saving

Menu	Top → OTHERS → POWER SAVE
Setting value	ON [Default], OFF

If you select "ON" and no operation of menu control keys is performed for 30 seconds, the display brightness is reduced to approximately 25%. When you operate any key operation, the luminance returns to 100%.

9.16.5 DISPLAY POWER key pressing time

Menu	Top → OTHERS → DISP POW BUTTON ON
Setting value	0ms to 5000ms (by 10ms) [Default]: 0ms

You can set the pressing response time of the DISPLAY POWER keys to prevent the sink device from being turned off when the switch is pressed accidentally.

9.16.6 Input channel automatic linking

Menu	Top → OTHERS → INPUT CHANNEL LINK
Setting value	VIDEO: OFF [Default], OUT1, OUT2, OUT3, OUT4 AUDIO: OFF [Default], OUT1, OUT2, OUT3, OUT4

Menus to be adjusted for each channel can be adjusted after the input number is selected. With this menu, you can select input to be adjusted automatically by switching input in **"8.2 Selecting input channels"**. This function is convenient to adjust each input channel based on specific display devices or AV amplifiers.
This menu is available models other than MSD-7201UHD and MSD-7201UHDTB.

- ・Inputs to be adjusted are not selected automatically: OFF [Default]
- ・When inputs of OUT1 is switched, the input to be adjusted automatically will be selected: OUT1.
- ・When inputs of OUT2 is switched, the input to be adjusted automatically will be selected: OUT 2.
- ・When inputs of OUT3 is switched, the input to be adjusted automatically will be selected: OUT 3.
- ・When inputs of OUT4 is switched, the input to be adjusted automatically will be selected: OUT 4.

Input number to be adjusted keeps settings separately for video and audio.

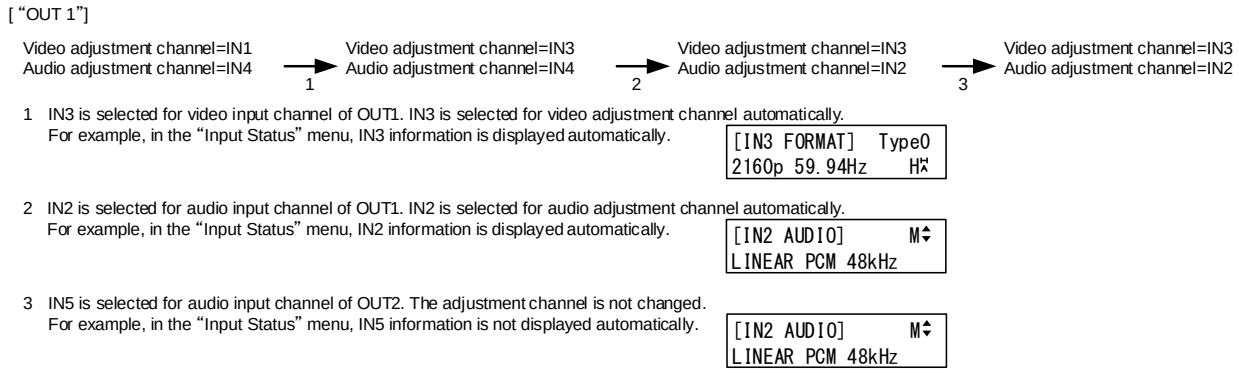

[Figure 9.35] Automatic channel selection

[Table 9.42] VIDEO

Menu	Description
Setting position, size, and masking (P.52)	Aspect ratio, Aspect ratio control, Overscan, Display position, Display size, Masking, Automatic sizing
Quality setting (P.58)	Sharpness, Brightness, Contrast, HUE, Saturation, Black level, Default color
Input settings (P.61)	Signal type of analog input
Setting input timing (P.66)	Automatic measurement, The total number of horizontal dots, Start position, Active area, Loading device data, Registering device data, Tracking
Other settings (P.129)	Input signal status

[Table 9.43] AUDIO

Menu	Description
Audio settings (P.80)	Input level, Lip sync
Other settings (P.129)	Input signal status

9.16.7 Top VFD screen

Menu	Top → OTHERS → TOP DISPLAY
Setting value	[Figure 9.36] Top screen

Default

```
MSD-7204UHD
```

AUDIO VOLUME

```
[OUT1 AUDIO]    MUTE
  0dB
```

You can enable/disable mute function everytime pressing the "ESC" key.

INPUT STATUS

```
IN1 2 3 4 5 6 7 8 9
   H   D   H     R V
```

MONITOR STATUS
(Displaying sink device status)

```
OUT 1 2 3 4
    S C   D
```

[Figure 9.36] Top screen

For the top page, you can select one of four types above.
With input signal status and sink device status pages, the details of each signal can be displayed using "▲" and "▼" keys.

【See: 9.16.8 Input signal status】
【See: 9.16.9 Sink device status】

9.16.8 Input signal status

Menu Top → OTHERS → INPUT STATUS
Setting value [Table 9.44] Input signal status

You can display the input signal status that is input from HDMI and DVI input connectors.

[Table 9.44] Input signal status

	All input channels	Video status of each input channel	Audio status of each input channel
Screen	IN1 2 3 4 5 6 7 8 9 ↕ H D H R V	[IN1 FORMAT] Type0 2160p 59.94Hz H	[IN1 AUDIO] M↕ LINEAR PCM 48kHz
Upper row	Input channel	Input channel, Stream type	Input channel, multi-channel audio information
Lower row	Input signal type, other information	Video signal format, input signal type, other information	Audio signal type

▪ **Input signal type**

[Table 9.45] Input signal type

Alphabet	Signal	Alphabet	Signal
H	HDMI signal	R	Analog RGB signal
D	DVI signal	Y	Analog YPbPr signal
No alphabet	No signal is input.	V	Analog composite video signal
		S	Analog S video signal

▪ **Other information**

Only for digital input

Upper: "H": signal is protected by HDCP.

Lower: "A": audio is embedded.

▪ **Stream type**

Type0: HDCP 2.2 stream type0

Type1: HDCP 2.2 stream type1

Nothing is displayed: If "H" of other information is displayed, the signal is HDCP 1.4.
If "H" of other information is not displayed, the signal is not pretected by HDCP.

▪ Format of video input signal

[Table 9.46] Format of video input signal

Example	Signal type	Items to be displayed
1080p 59.94Hz	SDTV / HDTV signal	Format type, vertical synchronous frequency
800 x 600 60.00Hz	RGB signal	Horizontal / Vertical resolution, vertical synchronous frequency
NTSC	Composite video signal or S video signal	Format type
56.83kHz 60.02Hz	Signal that cannot be recognized	Horizontal / Vertical synchronous frequency
NO SIGNAL	No video signal is input.	

▪ Multi-channel audio information

If multi-channel audio signal is input, an "M" is displayed on the upper right.

▪ Type of audio input signal

[Table 9.47] Type of audio input signal

Example	Signal type
LINEAR PCM 48kHz	Linear PCM, sampling frequency
COMPRESSED AUDIO	Compressed audio (such as Dolby Digital, DTS)
NO SIGNAL	No audio signal is input.

9.16.9 Sink device status

Menu Top → OTHERS → MONITOR STATUS
Setting value [Table 9.48] Sink device status

You can display the status of sink device connected to video output connectors.

[Table 9.48] Sink device status

	All video output connector	Details of each video output connector
Screen	OUT 1 2 3 4 ↕ S N E	[OUT1 MONITOR] H24↕ HDCP 2.2 SUPPORT AAA
Upper row	Video output channel	Output channel, output signal, color depth
Lower row	HDCP authentication status	HDCP authentication status, error code

▪ **Output signal, color depth**

H24: 24-BIT COLOR of HDMI signal
H30: 30-BIT COLOR of HDMI signal
D: DVI signal

▪ **HDCP authentication status**

[Table 9.49] HDCP authentication status

Alphabet	HDCP authentication status	Description
S	HDCP 2.2 SUPPORT	HDCP 2.2-compliant sink device is connected.
S	HDCP 1.4 SUPPORT	HDCP 1.4-compliant sink device is connected.
N	HDCP NOT SUPPORT	Non-HDCP-compliant sink device is connected.
E	HDCP ERROR	HDCP-compliant sink device is connected, but the authentication failed.
C	HDCP CHECK NOW	Sink device status is being checked.
D	MONITOR DISCONNECT	Monitor was disconnected (displayed only for 1 second).
	UNCONNECTED	No sink device is connected.

▪ **Error code**

From the left, statuses of video output, digital audio output, and analog audio output are displayed. (Example: AAA)

[Table 9.50] Error code

Code	Video output	Audio output
	If any number or character is not displayed, video or audio is output correctly.	
1		**"9.8.2 Output mute"** is set to "ON".
2	Displayed only for digital input. DDC power supply is not input. (If no source device is connected, this error code is displayed).	
3	No video signal is input.	No audio signal is input [*1]
4	Displayed only for digital input. Video or audio output of source device is in a Mute status.	
5	Displayed only for digital input. Signal with HDCP are input, but the sink device does not support HDCP. (This error code may also be displayed while authenticating HDCP).	
6	Displayed only for digital input. The source device does not output required information (packets) for outputting video or audio.	
7	Signal that are not supported by the MSD are input. (Sampling clock is out of the range).	Audio cannot be output, because compressed audio is input. (Compressed audio can be output only to sink devices supporting compressed audio).
8	—	**"9.8.7 Audio output connector"** is disabled.
9	—	**"9.7.1 Output mode"** is set to "DVI MODE" or a sink device that does not support audio is connected.[*2]
A	Input channel is set to "OFF".	

[*1]Input status of analog audio signal cannot be detected. Even if this status is not displayed, audio may sometimes not be output when analog input is selected.

[*2]This status is only for HDMI output connectors.

9.16.10 Displaying EDID of sink device

Menu Top → OTHERS → EDID STATUS
Setting value [Table 9.51] EDID information of sink device

You can display EDID information of the sink device that is connected to the video output connector.

- HDMI supported sink device: No.1 to No.6
- Non-HDMI-supported sink device: No.1 and No.2

If no sink device is connected, the VFD screen shows "UNCONNECTED". If the MSD cannot read EDID from connected sink devices, the VFD screen shows "EDID READ ERROR".

[Table 9.51] EDID information of sink device

No.	1	2	3
Screen	[OUT1]xxxx 1920x1080 148.50MHz	[OUT1]HDMI RGB/422/444/420 [OUT1] DVI	[OUT1] 24BIT COLOR
Upper row	Monitor name	HDMI or nothing is displayed	—
Lower row	Resolution, dot clock	Sampling structure RGB : RGB 422 : YCbCr 4:2:2 444 : YCbCr 4:4:4 420 : YCbCr 4:2:0 Or non-HDMI-supported sink device DVI: DVI device	Color depth

No.	4	5	6
Screen	[OUT1] 32/44.1/48/96kHz	[OUT1]16/20/24BIT 8CHANNEL COMPRESSED	[OUT1] HDR:-- / SCDC:ON
Upper row	—	Audio bit length	—
Lower row	Audio sampling frequency	Number of audio channels, compressed audio supported/not supported (COMPRESSED)	HDR and SCDC supported/not supported

9.16.11 Displaying version

Menu Top → OTHERS → VERSION
Show contents Product name, firmware version

You can display the product name and firmware version.

10 Product specification

Specifications and appearance are subject to change without notice.

Item				Description
Input	Video	HDMI / DVI	Number / Signal	3 inputs / HDMI Deep Color (*1) / DVI 1.0 (HDCP 1.4 / 2.2) - TMDS single link - TMDS clocks: 25 MHz to 300 MHz - Dot clocks: 25 MHz to 600 MHz - TMDS data rate: 0.75 Gbps to 18 Gbps
			Connector	3 female 19-pin HDMI Type A
			Number / Signal	4 inputs / HDMI Deep Color (*1) / DVI 1.0 (HDCP 1.4) - TMDS single link - TMDS clock: 25 MHz to 300 MHz - Dot clock: 25 MHz to 300 MHz - TMDS data rate: 0.75 Gbps to 9 Gbps
			Connector	4 female 19-pin HDMI Type A
			Number / Signal	2 inputs / HDMI Deep Color (*1) / DVI 1.0 (HDCP 1.4) - TMDS single link, - TMDS clock: 25 MHz to 225 MHz - Dot clock: 25 MHz to 165 MHz - TMDS data rate: 0.75 Gbps to 6.75 Gbps * Switch-selectable between digital and analog
			Connector	2 female 29-pin DVI-I
			Others	EDID emulation
		Universal Analog	Number / Signal	2 inputs / Composite video, Y/C, Analog RGB / Analog YPbPr (auto-recognition) - Composite video (VBS Signal): 1.0 V[p-p] / 75 Ω - Y/C: 1.0 V[p-p](Y) / 0.286 V[p-p](C) / 75 Ω - Analog RGB: 0.7 V[p-p](1.0 V[p-p] Sync on Green) / 75 Ω HS/VS TTL level, CS TTL level, Sync on Green - Analog YPbPr: 1.0 V[p-p](Y) / 0.7 V[p-p](Pb/Pr) / 75 Ω * Switch-selectable between digital and analog
			Connector	2 female 29-pin DVI-I,
			Others	EDID emulation
		Format	HDMI / DVI (IN1 to IN3)	Dot clock 25 MHz to 600 MHz 480i / 480p / 576i / 576p / 720p / 1080i / 1080p / 4K (up to 4K@60 4:4:4) VGA to 4K
			HDMI / DVI (IN4 to IN7)	Dot clock 25 MHz to 300 MHz 480i / 480p / 576i / 576p / 720p / 1080i / 1080p / 4K (up tp 4K@30) VGA to 4K
			HDMI / DVI (IN8 and IN9)	Dot clock 25 MHz to 165 MHz 480i / 480p / 576i / 576p / 720p / 1080i / 1080p VGA to QWXGA * WUXGA / QWXGA: Reduced Blanking only
			Universal Analog (IN8 and IN9)	Dot clock 25 MHz to 165 MHz NTSC/PAL 480i / 480p / 576i / 576p / 720p / 1080i / 1080p VGA to QWXGA * WUXGA / QWXGA: Reduced Blanking only
	Audio	Digital	Number / Signal	9 inputs / Multi-channel linear PCM up to 8 channels - Sampling frequency: 32 kHz to 192 kHz - Sample size: 16 bit to 24 bit - Reference level:-20 dBFS - Max. input level: 0 dBFS * Switch-selectable between digital and analog audio
			Connector	7 female 19-pin HDMI TypeA, 2 female 29-pin DVI-I
		Analog	Number / Signal	9 inputs / Stereo LR balanced/unbalanced signal - Balanced signal Input impedance: 48k Ω Reference level: -10 dBu Max. output level: +10 dBu - Unbalanced signal Input impedance: 24kΩ Reference level: -10 dBu Max. output level: +10 dBu * Switch-selectable between digital and analog audio
			Connector	9 RCA pin jacks / 5-pin terminal blocks
Output	Video	HDMI / DVI	Number / Signal	4 outputs / HDMI Deep Color (*1) / DVI 1.0 (HDCP 1.4 / 2.2) - TMDS single link - TMDS clocks: 25 MHz to 300 MHz - Dot clocks: 25 MHz to 600 MHz
			Connector	4 female 19-pin HDMI Type A
		Format		480i / 480p / 576i / 576p / 720p / 1080i / 1080p / 4K (3840x2160) / 4K (4096x2160) VGA / SVGA / XGA / WXGA (1280x768) / WXGA (1280x800) / Quad-VGA / SXGA / WXGA (1360x768) / WXGA (1366x768) / SXGA+ / WXGA+ / WXGA++ / UXGA / WSXGA+ / VESA1080 / WUXGA / QWXGA / 4K 和文と違う VESA1080 / WUXGA / QWXGA: Reduced Blanking only
	Audio	Digital	Number / Signal	4 outputs / Multi-channel linear PCM up to 8 channels - Sampling frequency: 32 kHz to 192 kHz - Sample size: 16 bit to 24 bit - Reference level: -20 dBFS - Max. output level: 0 dBFS
			Connector	4 female HDMI Type A,
		Analog	Number / Signal	4 outputs / Stereo LR balanced/unbalanced signal - Balanced signal Output impedance: 100 Ω Reference level: -10 dBu Max. output level: +10 dBu - Unbalanced signal Output impedance: 50 Ω Reference level: -10 dBu Max. output level: +10 dBu
			Connector	4 RCA pin jacks / 5-pin terminal blocks

Maximum cable distance		Digital Input	1080p@60: 98.4 ft./ 30 m 4K@60: 39.4 ft./ 12 m approx. (*2)
		Digital output	1080p@60: 98.4 ft./ 30 m 4K@60: 39.4 ft./ 12 m approx. (*2)
Functions	Analog video processing unit		3D Y/C separation
	Scan Converter		Aspect Ratio Control, Seamless Switching (*3), Picture adjustment (brightness, contrast, display position, display size), I/P conversion
	External control		RS-232C, LAN, contact closure, CEC (controls power of display) (*6), PJLink (class1)
	Others		All function setting through browser Automatic input detection and switching Volume adjustment (volume of input and output can be set separately) Lip Sync (Max. 16 frames) Audio breakaway enables independent audio and video switching Cross-point memory (storage for 9 settings) Preset memory (8 settings and startup settings) Last memory Anti-Snow (*4) Connection Reset (*5) External control commands (32 commands) Front panel security lock
External control	Serial control port	Number / Signal	2 ports / RS-232C
		Connector	2 9-pin D-subs / 3-pin terminal blocks
	LAN control port	Number / Signal	1 port / 10Base-T (Automatic Negotiation), 100Base-TX (Automatic Negotiation), Automatic MDI/MDI-X
		Connector	1 RJ-45
	Contact closure port	Number / Signal	9 ports / Non-voltage contact input up to 24 VDC 500 mA
		Connector	3 6-pin terminal blocks
General	Power voltage		AC ～ 100 V - 240 V ±10%, 50 Hz / 60 Hz±3 Hz
	Power consumption		MSD-7201UHD / MSD-7201UHDTB: About 69 W MSD-7202UHD / MSD-7202UHDTB: About 87 W MSD-7203UHD / MSD-7203UHDTB: About 107 W MSD-7204UHD / MSD-7204UHDTB: About 126 W
	Dimensions		MSD-7201UHD / MSD-7202UHD / MSD-7201UHDTB / MSD-7202UHDTB: 16.93(W) × 3.46(H) × 13.78(D)"/ 430 (W) × 88 (H) × 350 (D) mm MSD-7203UHD / MSD-7204UHD / MSD-7203UHDTB / MSD-7204UHDTB: 16.93(W) × 5.20(H) × 13.78(D)" / 430(W) × 132 (H) × 350(D) mm (EIA 3U; projections not included)
	Weight		MSD-7201UHD / MSD-7201UHDTB: 13.9 lbs. / 6.3 kg MSD-7202UHD / MSD-7202UHDTB: 14.6 lbs. / 6.6 kg MSD-7203UHD / MSD-7203UHDTB: 17 lbs. / 7.7 kg MSD-7204UHD / MSD-7204UHDTB: 17.6 lbs. / 8.0 kg
	Temperature		Operating: 32°F to 104°F/0°C to +40°C Storage: -4°F to +176°F/-20°C to +80°C
	Humidity		Operating/Storage: 20% to 90% (Non Condensing)

*1 30 bit/pixel (10 bit/component) Deep Color is supported while xvYCC, Lip Sync, 3D, ARC and HEC are not supported. 4K@60 Deep Color: 24 bit / pixel (8 bit / component) is supported.

*2 The maximum cable distance is measured under following conditions:
- 1080p@60: when IDK's AWG24 cable was used and signal of 1080p@60 24 bit / pixel (8 bit / component) was input or output.
- 4K@60 : when IDK's 18 Gbps supported cable was used and signal of 4K@60 24 bit / pixel (8 bit / component) was input or output.

The maximum cable distance depends on the connected I/O devices. With some I/O combinations, and if you use cables of other manufacturer, video may be disturbed or may not be output even if signal are within the range mentioned above.

*3 Seamless switching with a black frame..

*4 The anti-snow feature automatically fixes snow noise that is a specific symptom of HDCP-compliant signal and mainly occurs at start-up. This feature does not work when snow noise has already occurred during startup or when it occurs due to a bad condition of the transmission line.

*5 For digital systems, some problems, such as an HDCP authentication error, can often be recovered by physically disconnecting and reconnecting the digital cables. However, the Connection Reset feature will fix these problems automatically without the need to physically plug and unplug the cables. It creates the same condition as if the cable were physically disconnected and reconnected. This feature only works for the MSD's output. If other devices are connected between the MSD's output and sink device, this feature may be invalid.

*6 The sink device must support CEC. Some sink devices cannot be controlled from the MSD using CEC

11 Trouble shooting

This chapter recommends what to do if you have problems operating the MSD.

In case the MSD does not work correctly, please check the following items first.

- ・Are the MSD and all devices plugged in and powered on normally?
- ・Are cables connected correctly?
- ・Are there no loose connections?
- ・Are correct cables supported by devices being used?
- ・Are specifications of connected devices matched to each other?
- ・Are settings of the sink device correct?
- ・Are there any nearby objects that may cause noise?

If the problem still cannot be solved, perform the following actions. Refer to manuals of connected devices as well, since they may possibly be the cause of the problem.

Problem	Cause/Check item/Solution	Page
●Video output		
Video is not output.	Check the error code in "**9.16.9 Sink device status (P.136)**". (Since the MSD has multiple output connectors, check the error code of the output connector that does not output video.) ・Error code 2: Check if the source device is connected and turned on. ・Error code 3: Signal is not input. Check [1] to [6] on the next page. ・Error code 4: A problem may occur in the source device or HDCP authentication. Check [2], [5] and [6]. ・Error code 5: If a sink device that is not HDCP compliant is connected: - only video without content protection (such as analog input and test pattern) can be output - black is output when signal with content protection is input. - the MSD deos not display video, because it supports HDCP. In that case, you can disable HDCP input from the source device in "**9.5.2 Setting HDCP input (P.62)**" in order to display the video. Some source devices check whether the sink device is HDCP compliant or not and they output video depending on the result. ・Error code 6 and 7: A problem occurs in the source device. ・Error code A: Set "**8.2 Selecting input channels (P.30)**" to a value other than "OFF". ・If no error code is displayed: Set "**9.3.11 Test pattern (P.57)**" to a pattern other than "OFF". - If any test pattern is not output, check [5] to [7]. - If a test pattern is output, the source device may not output video.	—
Digital input video is not output.	[1] The set time for monitoring no-signal input may be too short.	61

Analog input video is not output.	[3] Change the input signal type.	63
Video is not output	[4] If the source device has multiple output connectors, check the video output settings of the source device.	ー
Video is disappeared, interrupted, or has noise.	[5] If using a long cable for input or output, replace it with a 5 m/16.4 ft. or shorter cable. Since the MSD has the equalizing function, long cables can be connected, but the MSD may not provide its full performance depending on the cable quality and the connected device. If the problem is solved by replacing the cable, signal may have been degraded due to the long haul transmission. We have high-quality cables, cable boosters and extenders. Please contact us as needed.	ー
	[6] When high-speed signal (high resolution: such as UXGA, WUXGA, QWXGA, WQHD, WQXGA, 1080p, 4K; DEEP COLOR signal) is input or output, video may not be displayed or noise may appear depending on the cable quality and the connected device. If the problem occurs only when a specific input is selected, the problem was caused by the input side. If it occurs for all inputs or only when a test pattern is displayed, the problem was caused by the output side. Change the resolution to a lower level and/or disable Deep color. You can check the resolution and color depth of the input signal in **"**9.16.8 Input signal status **(P.134)**" and you can also limit resolution and color depth of input signal according to the EDID setting. You can specify the output resolution and check the color depth of the output signal in "**9.16.9 Sink device status (P.136)**" and you can also limit the output signal color depth.	86, 88, 89 52 76
Input video and test pattern are not output.	[7] If you set the output resolution other than "AUTO", check if the selected resolution is supported by the sink device. If you select 480i, 576i, or 1080i, video may not be output to sink devices that do not support interlaced signal. For TV output resolutions (480i to 4K (4096 x 2160)), check the vertical synchronous frequency. PC output resolutions (VGA to WQXGA) may not be output to LCD TVs.	52
Video is interrupted.	If you set "**9.5.4 Automatic detection of input video intertuption (P.64)"** to "ON", false detection may occur. Change the setting to "OFF".	64
Video from HDMI/DVI output is interrupted or has noise.	If the problem occurs in all input channels or when a test pattern is displayed, replace the cable with a shorter one.	
Video from analog input is displayed in black-and-white or green.	Change the input signal type.	63
VHS reproduction or fast-forward is interrupted when	Automatic detection of input signal failed. Set the input signal type manually to "VIDEO AUTO", "VIDEO", or "Y/C".	63

analog composite video or analog S-Video is input.		
The left, right, top and bottom sides are cut off.	If the problem occurs only when "CROSS HATCH" (a test pattern) is output, the sink device enlarges and displays the video. Adjust the sink device. If the sink device does not have the adjusting function, set the video size and position of the output. If the problem occurs even if "CROSS HATCH" is output to all outputs, check [8] to [13].	57 54, 55
Part of video is cut off or black is displayed at edge(s).	[8] Check the overscan setting.	54
	[9] Settings of the display position or size are not changed? ***Note:*** Display position and size can be set for each input or output.	54, 55 52
	[10] If aspect ratios of the input signal and output resolution do not match, video may be cut off automatically or black may be displayed at edge(s) depending on settings. If the video is displayed on the full screen by setting the aspect ratio to "FULL", there is no problem. If the aspect ratios are not the same, you can select a) or b) below: a) video is cut off b) black is displayed at edge(s)	53 54
	[11] If vertical and horizontal frequencies are displayed in "**9.16.8 Input signal status (P.134)**", signal that is not registered in the built-in data of the MSD is input. If "**9.6.6 Automatic setting of input timing (P.71)**" is set to "AUTO SETUP ON", input timing is measured when new signal is input. However, if correct video is not input, the measurement may fail. In this case, measure the input timing manually and register the device data.	67, 72
	[12] For analog input, set the automatic measurement of input timing in "**9.6.1 Automatic measurement (P.67)**". If the result of the automatic measurement shows that video is cut off or black is displayed at edges, set the total number of the horizontal dots, scanning start position, and the active area. For digital input, the start position and active area do not have to be set. Only when video edges are cut off 1 to 2 dots, set these items. (For digital input, the total number of horizontal dots cannot be set).	69, 70
Black is displayed at top, bottom, right and left on PC video or only part of the PC video is displayed, and the rest is displayed by scrolling with the mouse.	[13] Does the PC resolution (you can check it in "Properties" of the PC) match the resolution that is output from the PC (you can check it in "**9.16.8 Input signal status (P.134)**")? If not, set the EDID and PC resolutions. If the copy of the built-in LCD screen is output in the laptop, the output to an output monitor is limited to the resolution of the LCD screen. As a result, black may be displayed at edges. The problem can be solved by enlarging the display or displaying only to the external monitor.	85, 86
Video is reduced vertically or	Does the selected aspect ratio of the output resolution match that of the connected sink device? If not, set the aspect ratio of the sink	53

horizontally.	device.	
	Check the set aspect ratio of the input signal.	53
	Check the monitor setting of the source device (such as 4:3, 16:9, letter box and the like).	ー
	For analog input, signal that cannot be recognized by the MSD and wrong aspect ratio may be applied. Perform the automatic measurement in the "NEXT ASPECT" mode.	67
Video flickers	If interlace signal is input to a sink device that does not support interlace signal, the video may flicker. Check the output resolution of the sink device.	52
PC's dual monitor cannot be set or the setting is canceled.	If the monitoring function for no-signal input works, the dual monitor function may not work correctly. In this case, disable the monitoring function.	61
It takes a long time to output video after video input is switched.	If you set the HDCP output to "HDCP INPUT ONLY", some sink devices may fail HDCP authentication. In this case, it may temporarily not output video and audio when a channel signal without HDCP support is input and then is switched to a channel signal with HDCP support is input. In this case, set the HDCP output setting to "HDCP 2.2" or "HDCP 1.4".	75
Video from a PC of analog input is displayed with bright-and- dark vertical stripes	Set the total number of horizontal dots. If you change the total number of horizontal dots, you may sometimes have to set the start position of scanning and the active area.	69
Light shadows appear on a few video lines from an analog input PC.	Adjust the tracking.	72
Fluctuation appears on the analog input video.	Adjust the tracking.	72
Automatic measurement of input timing fails.	In order to execute the automatic measurement of the input timing, the input video must have 25% or more brightness and its edges (all sides) need to be in contact with the circumscribed rectangle in the effective display area.	67
Display position of analog input video changes on its own.	If the function that automatically adjusts the display position (upper left of the screen) works while the automatic measurement is executed, the video may move on its own. In this case, disable the adjusting position function.	71
Part of the bitmap is cut off, or bitmap is not displayed on the full screen.	If the bitmap resolution does not match the output resolution, the bitmap may be partially cut off or may not be displayed on the full screen, depending on settings of the aspect ratio and display position. In this case, set the aspect ratio and display position as needed.	119

●Audio input		
Audio is not output.	If audio is not output, first check the error code in "**9.16.9 Sink device status (P.136)**". (The MSD has multiple output connectors. Find the error code of the output connector that does not output audio.) ・Error code 1: Set "**9.8.2 Output mute (P.81)**" to "OFF". ・Error code 2: Ensure that the source device is connected and powered on. ・Error code 3: Signal is not input. Check [14], [15], [17] and [18]. ・Error code 4: There may be problems in the source device side or HDCP authentication. Check [14]. ・Error code 5: If the display device or AV amplifier does not support HDCP, only audio without content protection (such as analog input) is output; audio is not output when signal with content protection is input. Some HDMI/DVI devices check if the connected device is HDCP compliant and determines whether to output HDCP signal or not. Since the MSD is HDCP compliant, audio may not be output if the MSD is connected to a sink device or AV amplifier that does not support HDCP. In this case, disable HDCP input from the input device in "**9.5.2 Setting HDCP input (P.62)**". ・Error code 6: There are problems in the source device. ・Error code 7: LCD monitors may not output compressed audio, such as Dolby Digital, DTS, and so on. If playing contents with compressed audio (such as Blu-ray disc), check the audio output setting. Audio signal that is output from the source device can be controlled by setting EDID. ・Error code 8: Enable the target audio output connector by setting "**9.8.7 Audio output connector (P.83)**". ・Error code 9: Set "**9.7.1 Output mode (P.73)**" to a mode other than "DVI MODE". If the sink device does not support HDMI signal, the MSD outputs DVI signal automatically. Check which signal type is supported by the sink device. ・Error code A: Set "**8.2 Selecting input channels (P.29)**" to "OFF". ・If any error code is not displayed: Check [14] to [18]. The source device may not be outputting audio.	89

Audio is not output from digital input.	[14] Is video being output correctly? If not, check [1], [2], [5] and [6].	ー
	[15] Is DVI signal output from the source device? You can check the input signal type in "**9.16.8 Input signal status (P.134)**". DVI signal may be output depending on EDID settings. If a source device that does not support 4K is connected to the input connector to which 4K EDID is set, DVI signal may be output. Change the setting of "**9.9.2 Resolution for PCs (P.86)"** and **"9.9.3 Input resolution for AV devices (P.88)"** to the value other than 4K.	88
	[16] Is the input audio format supported by the connected sink device or AV amplifier input? LCD monitors, especially, may not output 88.2 kHz or higher sampling frequency of linear PCM and compressed audio (such as Dolby Digital, DTS, and so on). Audio signal output from the source device can be controlled by setting EDID.	134 89
Audio of input connectors is not output.	[17] Is **"9.8.3 Input selection (P.81)"** set to "AUTO"? If not, change the setting to "AUTO" in order to switch the audio automatically.	81
Audio is not output.	[18] If the source device has multiple output connectors, check the audio output settings of the selected output device.	ー
Audio is output from digital output connectors but not from analog output connectors.	If compressed audio (such as Dolby Digital, DTS, and so on) is input, analog audio is not output. You can check the input audio type in "**9.16.8 Input signal status (P.134)**".	80 89
Audio is output from analog output connectors but not from digital output connectors.	If the output resolution is set to a value other than "AUTO", make sure that the sink device or AV amplifier supports the selected output resolution. If a PC output resolution (VGA to 4K) is selected, some sink devices and AV amplifiers cannot output audio.	52
	If the sampling frequency is set to a value other than "AUTO", make sure that the sampling frequency is supported by the sink device or AV amplifier. Some LCD monitors may not output audio whose sampling frequency is high (88.2 kHz or higher).	82
Compressed audio (such as Dolby Digital, DTS) is not output from the source device.	Compressed audio input is set to OFF (EDID settings) by factory default. If using compressed audio, change the EDID setting.	89
	In order to output compressed audio of multi-channel, set the number of speakers.	90
	Check the audio output settings of the source device.	ー
Multi-channel audio is not output.	In order to output multi-channel audio, set the number of speakers.	90
Audio of only a specific scene is not output from digital input	Is "DOWN MIX" is set for multi-channel audio output? For multi-channel audio, since channels changes depending on scenes, audio may not output if audio is not included in the set channel.	83
●Key operation		
Keys do not operate.	Ensure that keys are not locked.	32
	Since no control command is registered by Factory default, "DISPLAY POWER" keys do not work. Register and associate	98, 107

	control commands in order to enable these keys.	
	When a control command is executed using a front panel key, all keys are disabled until the command is executed or "INVALID TIME" passes.	108
	Check the set time of "POWER SWITCH ON" that prevent accidental operation.	131
	Immediately after start-up, all keys are disabled until the connection of the sink device is comfirmed.	29
Settings are not saved or reflected to the actual operation.	Settings of some menus may not be saved if the "MENU/SET" key is not pressed after setting.	31
●Communication command control		
Communication command control from the PC to the MSD cannot be performed.	Are the following items set correctly? For RS-232C: baud rate and data length For LAN: IP address and subnet mask	92, 93, 95
	Is COM PORT's FUNCTION set to "RECIEVER" mode? If it is set to "TRANSMITTER" mode, the communication command of the MSD cannot be controlled externally.	92, 94
"@ERR,6" is returned.	If control commands are executed by communication commands, the communication command controls are disabled until control commands executed or "INVALID TIME" passes.	108
	Immediately after start-up, the communication command control function is disabled until the connection of the sink device is confirmed.	29
●Sending control command function		
Control command is not sent.	Ensure that the registered control command and the number of bytes are correct. Devices requiring delimiters may not execute commands if the delimiters are not sent. If the set number of bytes is not correct, the control command is not sent completely or unnecessary data is sent after the control command.	98
	Is the registered control command linked to the desired control command execution condition?	107
	Is COM PORT's FUNCTION set to "RECIEVER" mode? In order to send the control command, set the communication port to "TRANSMITTER" mode. If using LAN, set the IP address and other settings of the connected device.	92, 94
"RETRY OVER ERROR" is displayed and control command is not sent completely.	Is the registered reply command correct?	104
	Ensure that the setting of "TIME OUT" for checking control commands is not too short.	98
Control through CEC cannot be performed.	Does the cable support CEC? In order to use CEC, use an HDMI cable that supports CEC.	—
	Does the sink device support CEC? Is the HDMI link function of the sink device set to be enabled? Enable the HDMI link control of the sink device and the function which turns on the sink device from external devices of the sink device.	

●Others		
Input signal temporarily disappear when input channel is switched.	When the CEC connection changes, EDID may change. In this case, input signal is interrupted. Check the CEC connection settings.	76
Devices cannot be controlled through CEC.	Are HDMI cables supporting CEC being used?	76
	To use CEC, enable HDMI link control of the connected devices (such as LCD TVs, Blu-ray recorder, and so on).	

If additional assistance is required, please perform the following tests and then contact us.

1. The problem occurs at all connectors?
2. Connect the devices using genuine cables without connecting the MSD.

The problem still cannot be solved? Please contact us for assistance.

User's Guide of MSD-72 Series

Ver.1.3.1

Issued on: 14 July 2017

Headquarters IDK Corporation
7-9-1 Chuo, Yamato-shi, Kanagawa-pref.
242-0021 JAPAN
TEL: +81-46-200-0764 FAX: +81-46-200-0765
Email: idk_eng@idk.co.jp URL: http: //www.idkav.com

USA IDK America Inc.
72 Grays Bridge Road Suite 1-C, Brookfield, CT 06804
TEL: +1-203-204-2445
Email: sales@idkav.com URL: http: //www.idkav.com

Europe IDK Europe GmbH
Lise-Meitner-Str. 6, D-40878 Ratingen
TEL: +49-2102-578-301-0
Email: info@idkav.eu URL: http: //www.idkav.eu

Product information Support Arvanics Corporation
7-9-1 Chuo, Yamato-shi, Kanagawa-pref.
242-0021 JAPAN
TEL: +81-46-259-6920 FAX: +81-46-259-6930
Email: info@arvanics.com URL: http: //www.arvanics.com